MINISTERO
DELL'INTERNO

Ministry of Interior - Italian Fire Service
Coordination team for short term countermeasures

VADEMECUM
STOP
SHORING TEMPLATES AND OPERATING PROCEDURES FOR THE SUPPORT OF BUILDINGS DAMAGED BY EARTHQUAKES

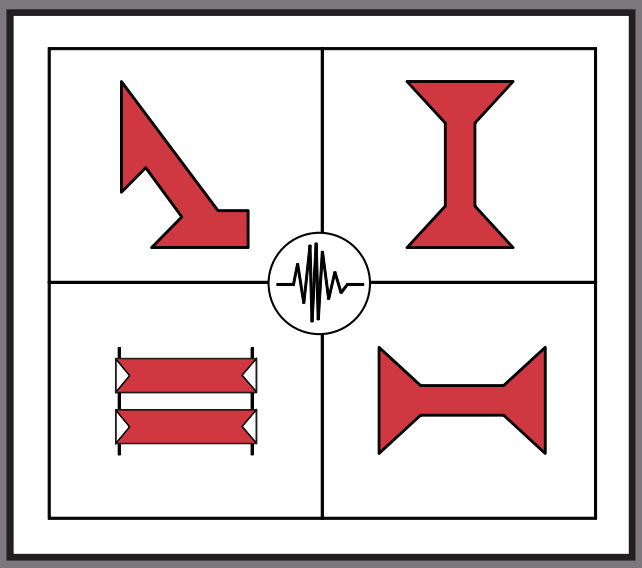

PROJECT DEVELOPMENT OF RAPID HIGHLY-SPECIALIZED OPERATIVE UNITS FOR STRUCTURAL EVALUATION DRHOUSE

This project is funded by the European Union

Ministry of Interior

Italian Fire Service

NCP Coordination team for short term countermeasures

University of Udine

DCFA Department of Chemistry, Physics and Environment
SPRINT Safety and Protection Intersectoral Laboratory

The VADEMECUM STOP© has been studied and edited by a specific working group for the Italian Fire Service, in order to standardize the short term countermeasures realized by Italian Fire Service personnel.
Publishing by others is forbidden (with or without changes).
The utilization of the VADEMECUM STOP© is free, provided that the Italian Fire Service is cited as owner.
The Italian Fire Service can not be held responsible for the incorrect usage of the VADEMECUM STOP©.

Cite as:
S. Grimaz (coord.), M. Cavriani, E. Mannino, L. Munaro, M. Bellizzi, C. Bolognese, M. Caciolai, A. D'Odorico, A. Maiolo, L. Ponticelli, F. Barazza, P. Malisan, A. Moretti (2010). Vademecum STOP. Shoring templates and operating procedures for the support of buildings damaged by earthquakes. Italian Fire Service, Ministry of Interior. Rome.

© CNVVF - www.vigilfuoco.it
Edition with May 2010 revisions.

MINISTERO
DELL'INTERNO

Ministry of Interior - Italian Fire Service
Coordination team for short term countermeasures

VADEMECUM

STOP

SHORING TEMPLATES AND OPERATING PROCEDURES FOR THE SUPPORT OF BUILDINGS DAMAGED BY EARTHQUAKES

Abruzzo earthquake 2009
Coordination team for short term countermeasures (NCP)

WORKING GROUP FOR THE STOP MANUAL
Under the supervision of Sergio Basti
Central director for emergency and urgent technical rescue

coordinator:
Stefano Grimaz
University of Udine

Marco Cavriani, Eros Mannino, Loris Munaro,
Mario Bellizzi, Ciro Bolognese, Mauro Caciolai,
Andrea D'Odorico, Alberto Maiolo, Luca Ponticelli
Italian Fire Service

with the contribute of:
Fausto Barazza, Petra Malisan, Alberto Moretti
University of Udine

April 2010

Ministry of Interior

Italian Fire Service

NCP Coordination team for short term countermeasures

University of Udine

DCFA Department of Chemistry, Physics and Environment
SPRINT Safety and Protection Intersectoral Laboratory

The VADEMECUM STOP© has been studied and edited by a specific working group for the Italian Fire Service, in order to standardize the short term countermeasures realized by Italian Fire Service personnel.
Publishing by others is forbidden (with or without changes).
The utilization of the VADEMECUM STOP© is free, provided that the Italian Fire Service is cited as owner.
The Italian Fire Service can not be held responsible for the incorrect usage of the VADEMECUM STOP©.

Cite as:
S. Grimaz (coord.), M. Cavriani, E. Mannino, L. Munaro, M. Bellizzi, C. Bolognese, M. Caciolai, A. D'Odorico, A. Maiolo, L. Ponticelli, F. Barazza, P. Malisan, A. Moretti (2010). Vademecum STOP. Shoring templates and operating procedures for the support of buildings damaged by earthquakes. Italian Fire Service, Ministry of Interior. Rome.

© CNVVF - www.vigilfuoco.it
Edition with May 2010 revisions.

VADEMECUM STOP

TIMBER RAKER SHORES

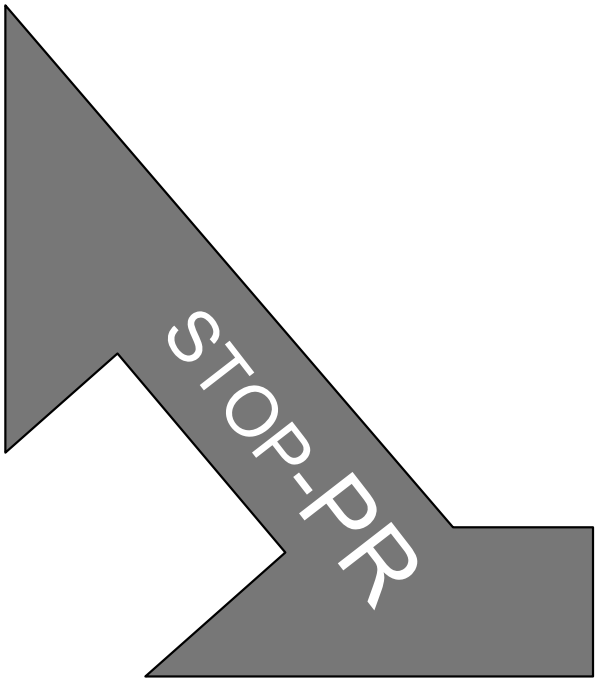

© CNVVF- Using allowed under CNVVF supervision

ABRUZZO EARTHQUAKE 2009
COORDINATION TEAM FOR TEMPORARY WORKS

WORKING GROUP FOR THE VADEMECUM STOP
under the supervision of Sergio Basti - Central director for emergency and urgent technical rescue
manual licensed by note no. EM3064/5001-11 dated 2009-06-15

S.Grimaz (coordinator)
L.Munaro, M.Cavriani, E.Mannino, C.Bolognese, M.Caciolai, L.Ponticelli,
M.Bellizzi, A. D'Odorico, A.Maiolo

With the contribute of:
F.Barazza, P.Malisan, A.Moretti

Translated by:
L. Ponticelli, S. La Mendola, E. Gissi
and
Keith Bellamy
Section Leader, Urban Search & Rescue
Hampshire Fire and Rescue Service, UK

© CNVVF- Using allowed under CNVVF supervision

TIMBER RAKER SHORES: selection criteria

STOP-**PR**

MAIN SCENARIOS

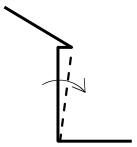

OUT OF VERTICAL PLANE ROTATION

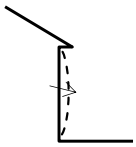

BULGING OF THE WALL

SOLUTION WITH

SOLID SOLE RAKERS

see STOP-**PR**/B
(from page 2/15)

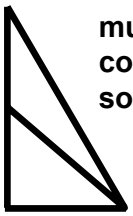

multiple insertion, converging, solid sole, rakers

multiple insertion, parallel, solid sole, rakers

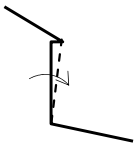

OUT OF VERTICAL PLANE ROTATION

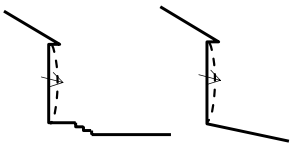

BULGING OF THE WALL

SOLUTION WITH

FLYING RAKERS

see STOP-**PR**/S
(from page 9/15)

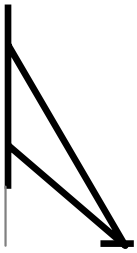

multiple insertion, converging flying raker on a single point base

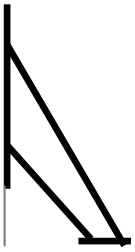

multiple insertion, flying raker on a short solid sole

NOTE: WALL RESTRAINING CAN BE ALSO DONE BY OTHER TECHNIQUES LIKE STEEL WIRE ROPE TIE BACKS. THE USE OF STEEL WIRE ROPE TIE BACKS SHALL BE PREFERRED WHEN THE DAMAGED WALL ABUTS ON A NARROW STREET.

© CNVVF- Using allowed under CNVVF supervision

SOLID SOLE RACKERS: general recommendations

STOP-**PR**/B

Movement to contrast:

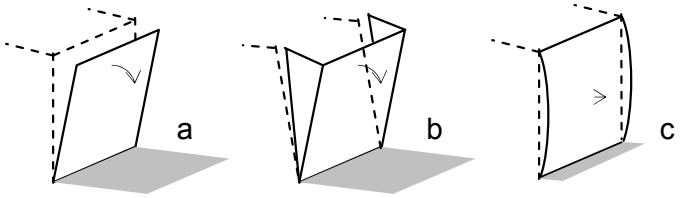

rotation bulging

Description

Potential out of plane rotation of a wall due to:
a) break of the joint between two perpendicular walls
b) break of the supporting perpendicular wall

Evidence of bulging on the external walls

Function of the raker: to prevent further rotation or bulging of the wall

STRUCTURAL SKETCHES (the following tables shall be used for both solutions)

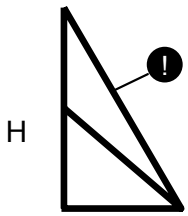

Critical element: ! the main raker

multiple insertion, converging, solid sole, rakers

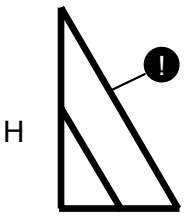

Critical element: ! the main raker

multiple insertion, parallel, solid sole, rakers

Shored wall area and supporting areas for each raker

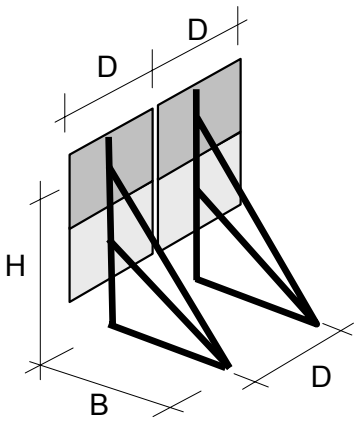

H main raker insertion point
D span between shores
B sole length

Table 1 – Selection of type depending on the height H

Height H (m)	**TYPE**
$2.0 \leq H \leq 3.0$ m	**R1** (see table R1)
$3.0 < H \leq 5.0$ m	**R2** (see table R2)
$5.0 < H \leq 7.0$ m	**R3** (see table R3)
H > 7.0 m	Use laminated timber or steel. Specific design required.

© CNVVF- Using allowed under CNVVF supervision

SOLID SOLE RACKERS: general recommendations

STOP-**PR**/B

R1

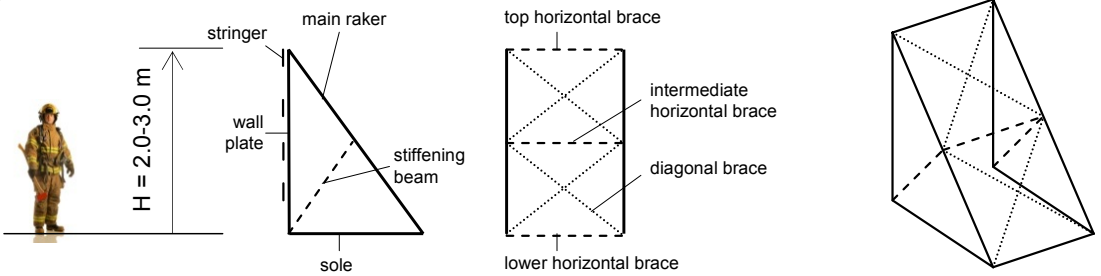

Table 2 – Main solid sole raker dimensions (cm x cm) for the type R1

R1 H 2.0-3.0 m	wall thickness s_m	≤ 0.6 m				0.6 – 1.0 m			
seismic class (see Annex 1)		class A		class B		class A		class B	
sole length B		1.5 m	2.5 m	1.5 m	2.5 m	1.5 m	2.5 m	1.5 m	2.5 m
span between shores D	D≤1.5 m	13 x 13	13 x 13	13 x 13	13 x 13	15 x 15	13 x 13	13 x 13	13 x 13
	1.5<D≤2.0 m	15 x 15	13 x 13	13 x 13	13 x 13	18 x 18	15 x 15	15 x 15	13 x 13

If no Annex 1 is provided, seismic class A should be used

Other elements	
sole	same as the main raker
wall plate	same as the main raker
stiffening beams	2 lengths of 2.5 x 12 cm screwed/nailed on the struts by 3 screws Ø5 x 100 mm or by 3 nails L = 80 mm each end
diagonal braces	lengths of 2.5 x 12 cm screwed/nailed by 2 screws Ø5 x 100 mm or by 3 nails L = 80 mm each end
horizontal braces	lengths of 8 x 8 cm screwed/nailed by 2 screws Ø6 x 160 mm or by 3 nails L = 150 mm each end
stringers	lengths of 5 x 20 cm with 1 m as the max distance between centres placed on the continuous parts of the wall

CORRECT ANGLE
OF THE MAIN RAKER

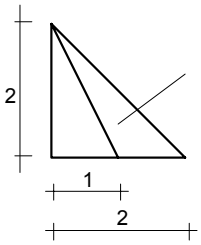

range of correct angle
for the main raker

© CNVVF- Using allowed under CNVVF supervision

SOLID SOLE RACKERS: general recommendations

STOP-**PR**/B

R2

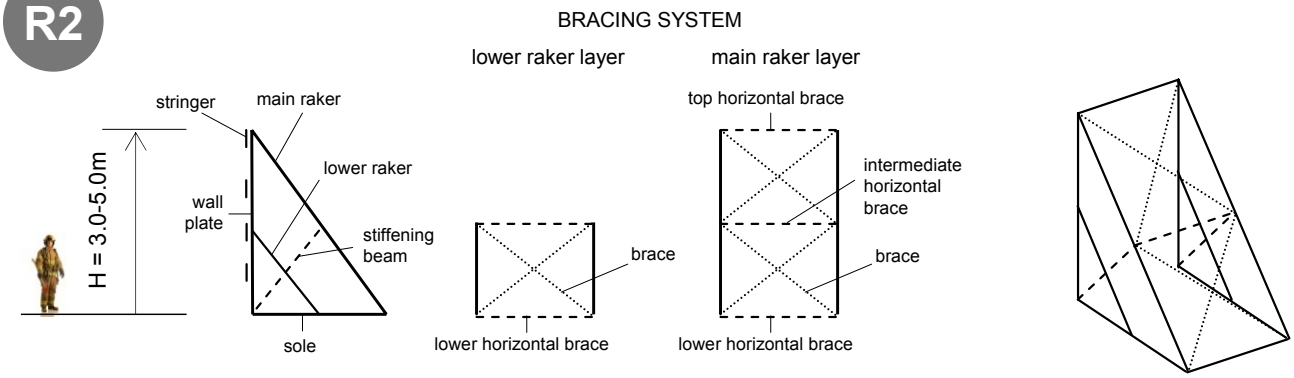

Table 3 - Main solid sole raker dimensions (cm x cm) for the type R2

R2 H 3.0-5.0m	wall thickness s_m	≤ 0.6 m				0.6 – 1.0 m			
seismic class (see Annex 1)		class A		class B		class A		class B	
sole length B		2.5 m	3.5 m	2.5 m	3.5 m	2.5 m	3.5 m	2.5 m	3.5 m
span between shores D	D≤1.0 m	13 x 13	13 x 13	13 x 13	13 x 13	15 x 15	15 x 15	15 x 15	13 x 13
	1.0<D≤1.5 m	15 x 15	15 x 15	15 x 15	13 x 13	18 x 18	18 x18	15 x 15	15 x 15
	1.5<D≤2.0 m	18 x 18	15 x 15	15 x 15	15 x 15	20 x 20	18 x 18	18 x 18	18 x 18
	2.0<D≤2.5 m	18 x 18	18 x 18	18 x 18	15 x 15	n.a.	18 x 18	20 x 20	18 x 18

n.a. - not avalilable, specific design required
If no Annex 1 is provided, seismic class A should be used

Other elements	
lower raker	same as the main raker
sole	same as the main raker
wall plate	same as the main raker
stiffening beams	2 lengths of 5 x 20 cm screwed/nailed on the struts by 3 screws Ø5 x 100 mm or by 3 nails L = 100 mm each end
braces	lengths of 5 x 20 cm screwed/nailed by 3 screws Ø5 x 100 mm or by 3 nails L = 100 mm each end *or* lengths of 8 x 8 cm screwed/nailed by 2 screws Ø6 x 160 mm or by 2 nails L = 150 mm each end
horizontal braces	lengths of 8 x 8 cm screwed/nailed by 2 screws Ø6 x 160 mm or by 2 nails L = 150 mm each end
stringers	lengths of 5 x 20 cm with 1 m as the max distance between centres placed on the continuous parts of the wall

CORRECT ANGLE
OF THE MAIN RAKER

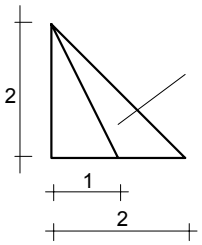

range of correct angle
for the main raker

© CNVVF- Using allowed under CNVVF supervision

SOLID SOLE RACKERS: general recommendations

STOP-**PR**/B

R3

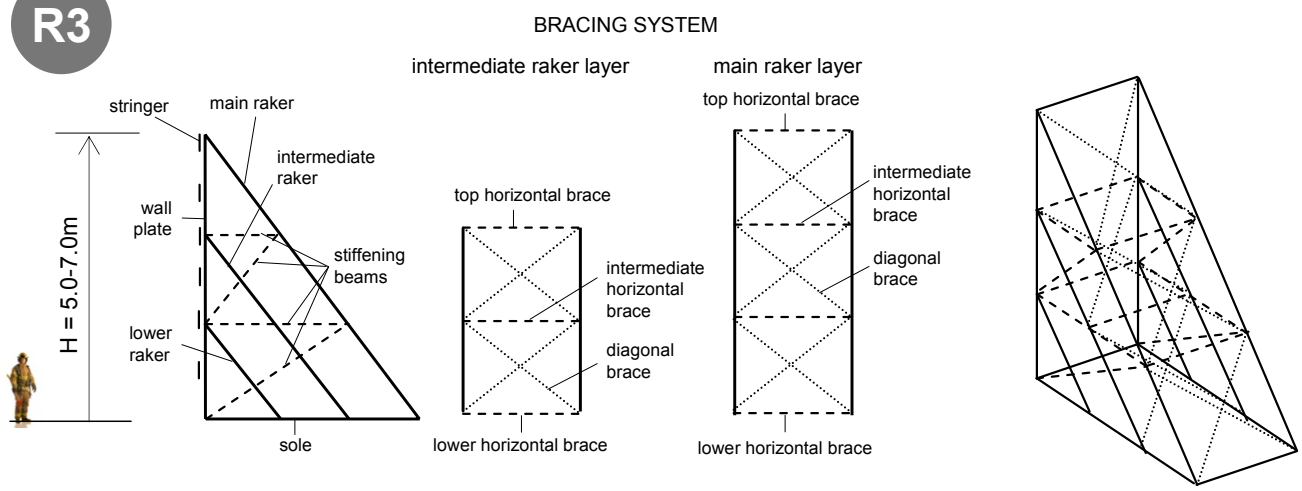

Table 4 - Main solid sole raker dimensions (cm x cm) for the type R3

R3 H 5.0-7.0 m	wall thickness s_m	≤ 0.6 m				0.6 m – 1.0 m			
seismic class (see Annex 1)		class A		class B		class A		class B	
sole length B		3.5 m	4.5 m	3.5 m	4.5 m	3.5 m	4.5 m	3.5 m	4.5 m
span between shores D	D≤1.0 m	20 x 20	20 x 20	20 x 20	20 x 20	20 x 20	20 x 20	20 x 20	20 x 20
	1.5<D≤2.0 m	20 x 20	20 x 20	20 X 20	20 x 20	n.a.	20 x 20	n.a.	20 x 20

n.a - not avalilable, specific design required
If no Annex 1 is provided, seismic class A should be used

Other elements	
lower raker	same as the main raker
sole	same as the main raker
Wall plate	same as the main raker
stiffening beams	2 lengths of 5 x 20 cm screwed/nailed on the struts by 3 screws Ø5 x 100 mm or by 3 nails L = 100 mm each end
braces	lengths of 5 x 20 cm screwed/nailed by 3 screws Ø5 x 100 mm or by 3 nails L = 100 mm each end *or* lengths of 8 x 8 cm screwed/nailed by 2 screws Ø6 x 160 mm or by 2 nails L = 150 mm each end
horizontal braces	lengths of 8 x 8 cm screwed/nailed by 2 screws Ø6 x 160 mm or by 2 nails L = 150 mm each end
stringers	lengths of 5 x 20 cm with 1 m as the max distance between centres placed on the continuous parts of the wall

CORRECT ANGLE
OF THE MAIN RAKER

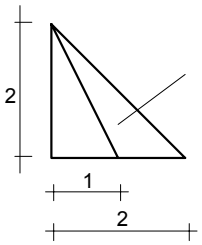

range of correct angle
for the main raker

© CNVVF- Using allowed under CNVVF supervision

SOLID SOLE RAKERS: general recommendations

STOP-**PR**/B

Critical considerations

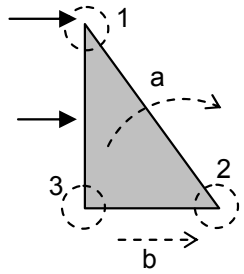

Global considerations
a – global rotation
b – base sliding

Local considerations
1 – breaking of the top node
2 – breaking of the lower external node
3 – breaking of the lower internal node

Global solutions

(a) (b)

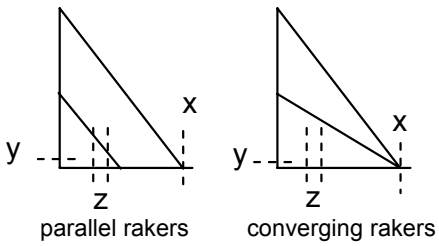

x – installing a restraining system to avoid the base sliding outward

y – embedding the sole into the wall or
anchoring the wall plate to the wall

or, instead of y:

z – pinning the sole to the ground using solution A on page 7/15.
Nailing length shall be half the sole length and start from the wall end.

WARNING: the z solution shall be employed ONLY IF it is not possible to embed the sole into the wall. In this case the wall plate to wall interface shall guarantee enough friction as to prevent the upward sliding of the shore.

Local solutions

(1) Wall plate-raker node

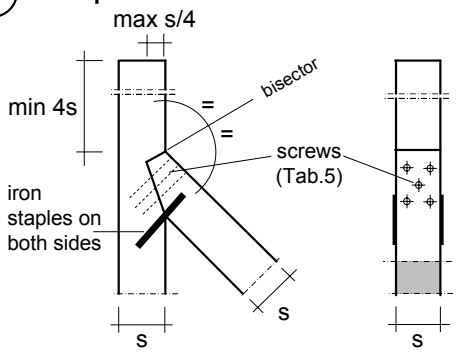

(2) Raker-sole node

a

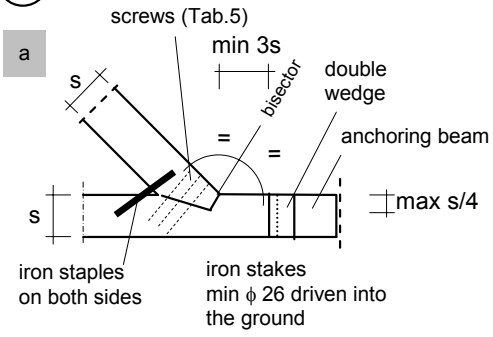

b

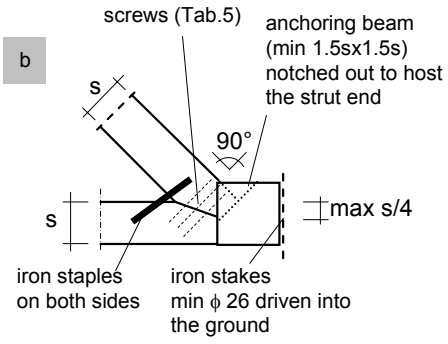

NOTE: both (a) and (b) are possible, but (a) is preferred

WARNING: the joint notch should never go deeper than s/4

Table 5 – Screws and bolts

section	screws	bolts
13 x 13	5 ϕ10x150	2 ϕ16
15 x 15	5 ϕ12x180	3 ϕ16
18 x 18	5 ϕ12x200	4 ϕ16
20 x 20		

WARNING: Iron staples min ϕ8 or timber boards on both sides of the wall plate (2.5cm thickness, nailed or screwed)

(3) Wall plate-sole node

c

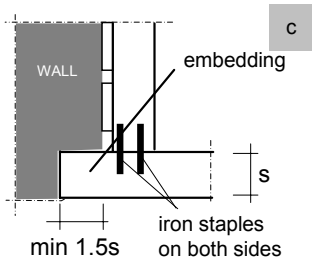

d

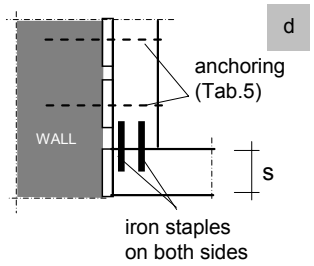

NOTE: (c) and (d) are alternative solutions

WARNING:
embedding or anchoring are not necessary when using the z solution.

© CNVVF- Using allowed under CNVVF supervision

SOLID SOLE RAKERS: anchoring solutions for the base

STOP-**PR**/B

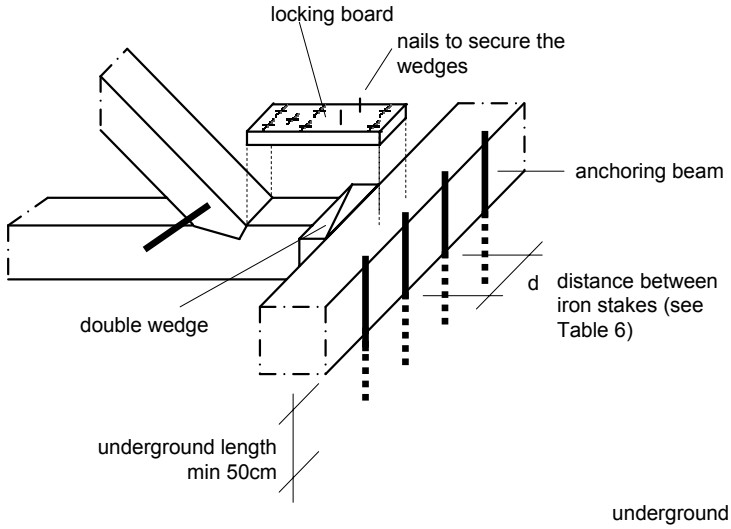

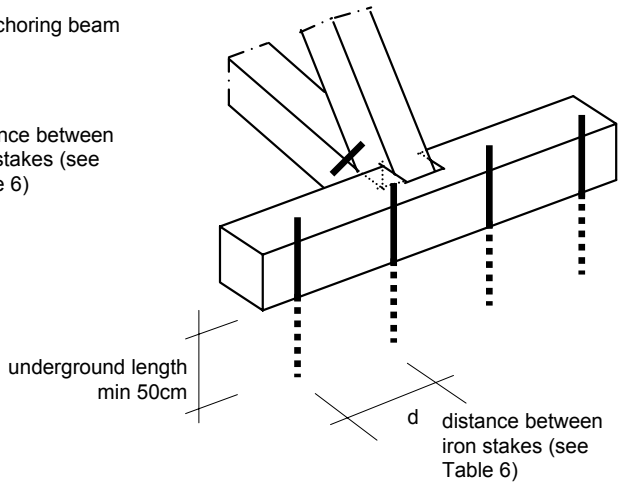

Stakes on a single side of the beam
(S)

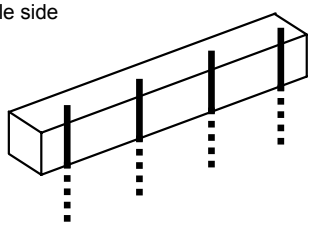

Stakes coupled
(A)

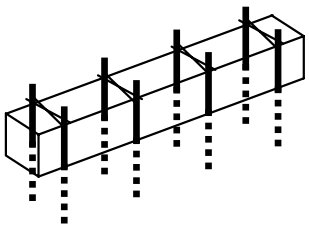

Double anchorage beam
(D)

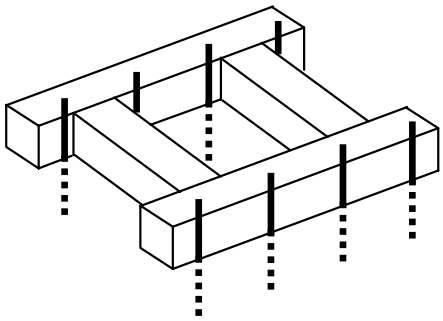

WARNING: remember to install protective elements over the stakes.

Table 6 - Distance d between the stakes

STAKES FOR ANCHORING	R1		R2		R3	
wall thickness s_m	≤0.6m	0.6<s_m≤1.0m	≤0.6m	0.6<s_m≤1.0m	≤0.6m	0.6<s_m≤1.0m
seismic class A	1 Ø26 every 50 cm (S)	1 Ø26 every 40 cm (S)	1 Ø26 every 30 cm (S)	1 Ø26 every 25 cm (S) or 40 cm on two rows (A) o (D)	1 Ø26 every 12.5 cm (S) or every 25 cm on two rows (A) o (D)	1 Ø26 every 10 cm (S) or every 20 cm on two rows (A) o (D)
seismic class B	1 Ø26 every 60 cm (S)	1 Ø26 every 50 cm (S)	1 Ø26 every 40 cm (S)	1 Ø26 every 30 cm (S) or 50 cm on two rows (A) o (D)	1 Ø26 every 15 cm (S) or every 30 cm on two rows (A) o (D)	1 Ø26 every 12.5cm (S) or every 25 cm on two rows (A) o (D)

NOTE: given the same distance between the stakes, when the (S) solution is allowed, also (A) and (D) are; if the (A) solution is allowed, also (D) is.
If no Annex 1 is provided, seismic class A should be used

© CNVVF- Using allowed under CNVVF supervision

TIMBER SOLID SOLE RAKER SHORES

Field of application
These solutions shall be used to support buildings damaged by earthquakes.

General assumptions
These raker shores shall be employed to restrain load bearing masonry walls not exceeding 1m thick. Two solutions are proposed: the tables R1, R2 and R3 shall be used for both parallel or converging rakers having the same height H.
"H" is defined as the difference in height between the sole lower point and the raker upper edge. This edge should be placed at a corresponding insertion point on the other side of the restrained wall, for example a slab, a vault, an arch, or a perpendicular wall, in order to effectively transfer the forces to the raker shore.
Given the height "H", the raker shore type R1, R2, or R3 is therefore chosen using table 1 at page 2/15. When H>7.0m, using laminated timber or steel instead of ordinary timber is recommended, and specific design of the raker shore is required.
Given the thickness of the restrained wall "s_m" and the seismic class (see Annex 1), once the span "D" and the sole length "B" are chosen, the raker shore shall be sized using table 2 for R1 type, table 3 for R2 type, table 4 for R3 type.
Many raker shore elements share the same section size to ease timber procurement and simplify the shore's connections.
On page 6/15 main construction critical considerations are listed, and corresponding solutions are showed. Some construction details of the shore's connections are proposed.
On page 7/15 two kinds of construction details for anchoring of the sole are shown.
In particular the sole anchoring should:
- prevent the upward displacement of the sole-wall plate node;
- prevent the outward displacement of the sole-raker node.

WARNING
All the provided dimensions are intended as minimum values. During the construction phase, thicker sections can be used, if available.

© CNVVF- Using allowed under CNVVF supervision

FLYING RAKERS: general recommendations

STOP-**PR**/S

Movement to contrast:

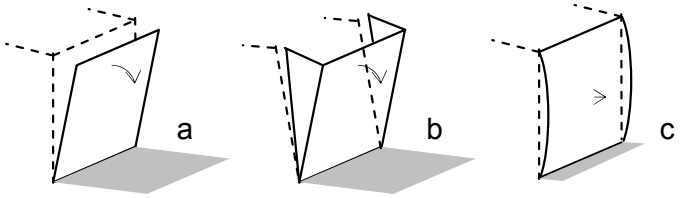

rotation bulging

Description:

Potential out of plane rotation of a wall due to:
a) break of the joint between two perpendicular walls
b) break of the supporting perpendicular wall

Evidence of bulging on the external walls

Function of the raker: to prevent further rotation or the bulging of the wall

STRUCTURAL SKETCHES (the following tables shall be used for both solutions)

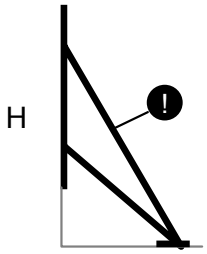

Critical element: ! the main raker

multiple insertion, converging, flying raker, on a single point base

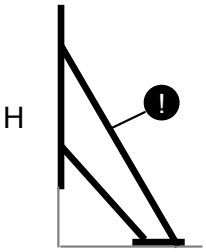

Critical element: ! the main raker

multiple insertion, flying raker, on a short solid sole

Shored wall area and supporting areas for each raker

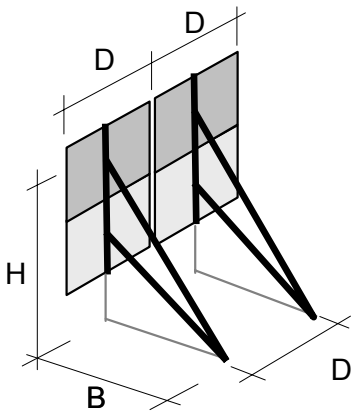

H main raker insertion point
D span between shores
B sole length

Table 7 – Selection of type depending on the height H

Height H (m)	**TYPE**
$2.0 \leq H \leq 3.0$ m	**R1** (see table R1)
$3.0 < H \leq 5.0$ m	**R2** (see table R2)
$5.0 < H \leq 7.0$ m	**R3** (see table R3)
H > 7.0 m	Use laminated timber or steel. Specific design required.

© CNVVF- Using allowed under CNVVF supervision

FLYING RAKERS: general recommendations

STOP-**PR**/S

R1

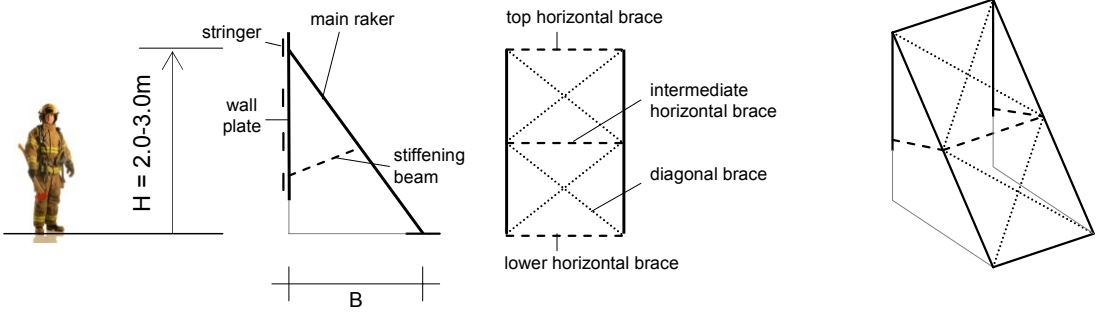

Table 8 – Main flying raker dimensions (cm x cm) for the type R1

R1 H 2.0-3.0m	wall thickness s_m	≤ 0.6 m				0.6 – 1.0 m			
seismic class (see Annex 1)		class A		class B		class A		class B	
sole length B		1.5 m	2.5 m	1.5 m	2.5 m	1.5 m	2.5 m	1.5 m	2.5 m
span between shores D	D≤1.5 m	13 x 13	13 x 13	13 x 13	13 x 13	15 x 15	13 x 13	13 x 13	13 x 13
	1.5<D≤2.0 m	15 x 15	13 x 13	13 x 13	13 x 13	18 x 18	15 x 15	15 x 15	13 x 13

If no Annex 1 is provided, seismic class A should be used

Other elements	
sole	same as the main raker
wall plate	same as the main raker
stiffening beams	2 lengths of 2.5 x 12 cm screwed/nailed on the struts by 3 screws Ø5 x 100 mm or by 3 nails L = 80 mm each end
diagonal braces	lengths of 2.5 x 12 cm screwed/nailed by 2 screws Ø5 x 100 mm or by 3 nails L = 80 mm each end
horizontal braces	lengths of 8 x 8 cm screwed/nailed by 2 screws Ø6 x 160 mm or by 3 nails L = 150 mm each end
stringers	lengths of 5 x 20 cm with 1 m as the max distance between centres placed on the continuous parts of the wall

CORRECT ANGLE
OF THE MAIN RAKER

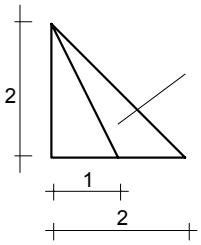

range of correct angle
for the main raker

© CNVVF- Using allowed under CNVVF supervision

FLYING RAKERS: general recommendations

STOP-**PR**/S

R2

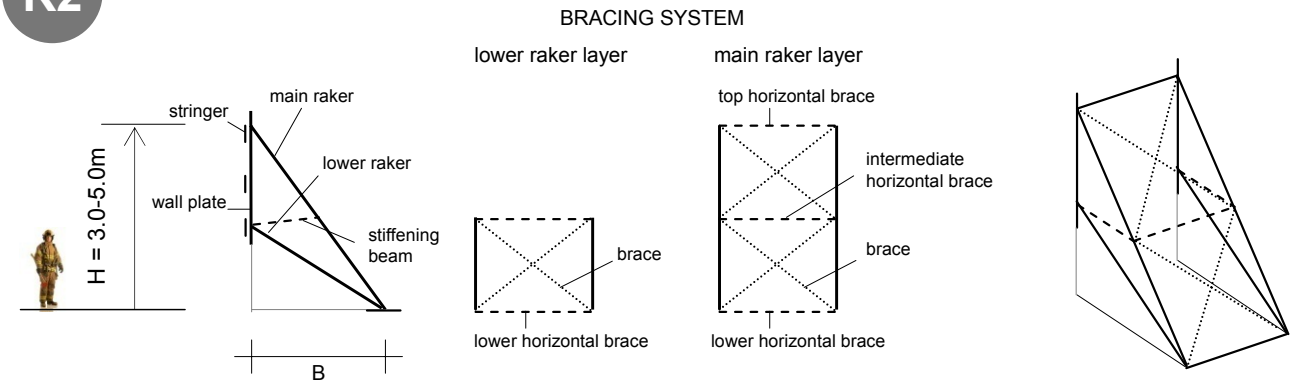

Table 9 - Main flying raker dimensions (cm x cm) for the type R2

R2 H 3.0-5.0 m	wall thickness s_m	≤ 0.6 m				0.6 – 1.0 m			
seismic class (see Annex 1)		class A		class B		class A		class B	
sole length B		2.5 m	3.5 m	2.5 m	3.5 m	2.5 m	3.5 m	2.5 m	3.5 m
span between shores D	D≤1.0 m	13 x 13	13 x 13	13 x 13	13 x 13	15 x 15	15 x 15	15 x 15	13 x 13
	1.0<D≤1.5 m	15 x 15	15 x 15	15 x 15	13 x 13	18 x 18	18 x18	15 x 15	15 x 15
	1.5<D≤2.0 m	18 x 18	15 x 15	15 x 15	15 x 15	20 x 20	18 x 18	18 x 18	18 x 18
	2.0<D≤2.5 m	18 x 18	18 x 18	18 x 18	15 x 15	n.a.	18 x 18	20 x 20	18 x 18

n.a. - not avalilable, specific design required
If no Annex 1 is provided, seismic class A should be used

Other elements	
lower raker	same as the main raker
sole	same as the main raker
wall plate	same as the main raker
stiffening beams	2 lengths of 5 x 20 cm screwed/nailed on the struts by 3 screws Ø5 x 100 mm or by 3 nails L = 100 mm each end
braces	lengths of 5 x 20 cm screwed/nailed by 3 screws Ø5 x 100 mm or by 3 nails L = 100 mm each end *or* lengths of 8 x 8 cm screwed/nailed by 2 screws Ø6 x 160 mm or by 2 nails L = 150 mm each end
horizontal braces	lengths of 8 x 8 cm screwed/nailed by 2 screws Ø6 x 160 mm or by 2 nails L = 150 mm each end
stringers	lengths of 5 x 20 cm with 1 m as the max distance between centres placed on the continuous parts of the wall

CORRECT ANGLE
OF THE MAIN RAKER

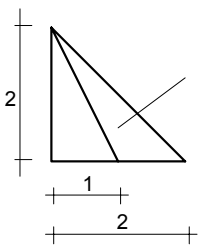

range of correct angle
for the main raker

© CNVVF- Using allowed under CNVVF supervision

FLYING RAKERS: general recommendations

STOP-**PR**/S

R3

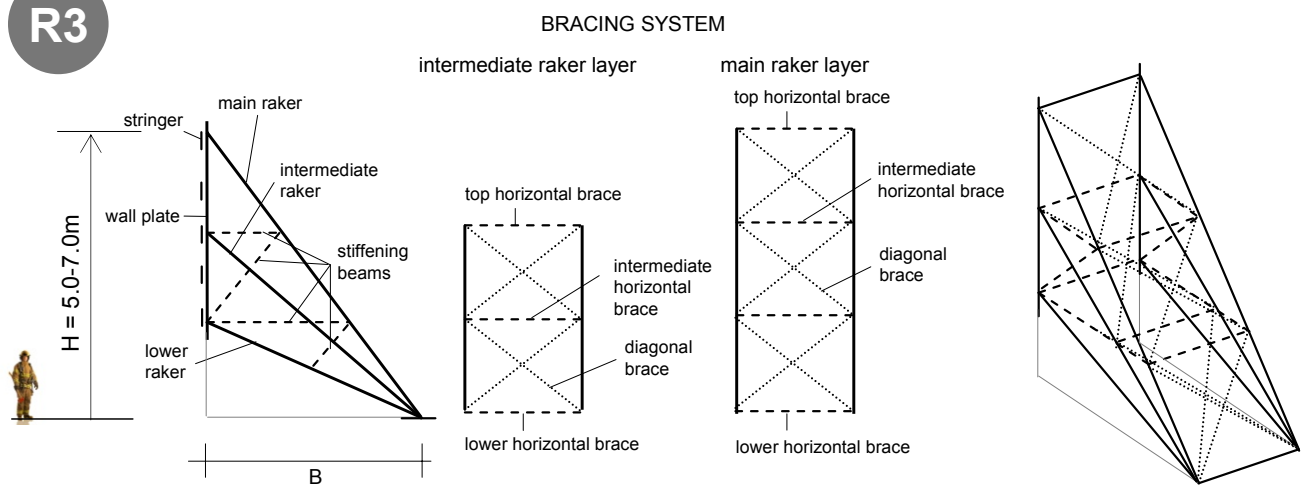

Table 10 - Main flying raker dimensions (cm x cm) for the type R3

R3 H 5.0-7.0 m	wall thickness s_m	≤ 0.6 m				0.6 m – 1.0 m			
seismic class (see Annex 1)		class A		class B		class A		class B	
sole lenght B		3.5 m	4.5 m	3.5 m	4.5 m	3.5 m	4.5 m	3.5 m	4.5 m
span between shores D	D≤1.0 m	20 x 20	20 x 20	20 x 20	20 x 20	20 x 20	20 x 20	20 x 20	20 x 20
	1.5<D≤2.0 m	20 x 20	20 x 20	20 X 20	20 x 20	n.a.	20 x 20	n.a.	20 x 20

n.a. - not avalilable, specific design required
If no Annex 1 is provided, seismic class A should be used

Other elements	
lower raker	same as the main raker
sole	same as the main raker
wall plate	same as the main raker
stiffening beams	2 lengths of 5 x 20 cm screwed/nailed on the struts by 3 screws Ø5 x 100 mm or by 3 nails L = 100 mm each end
braces	lengths of 5 x 20 cm screwed/nailed by 3 screws Ø5 x 100 mm or by 3 nails L = 100 mm each end *or* lengths of 8 x 8 cm screwed/nailed by 2 screws Ø6 x 160 mm or by 2 nails L = 150 mm each end
horizontal braces	lengths of 8 x 8 cm screwed/nailed by 2 screws Ø6 x 160 mm or by 2 nails L = 150 mm each end
stringers	lengths of 5 x 20 cm with 1 m as the max distance between centres placed on the continuous parts of the wall

CORRECT ANGLE
OF THE MAIN RAKER

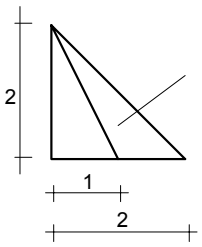

range of correct angle
for the main raker

© CNVVF- Using allowed under CNVVF supervision

FLYING RAKERS: general recommendations

STOP-**PR**/S

Critical considerations

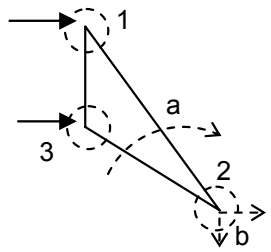

Global considerations
a – global rotation
b – base sliding/sinking

Local considerations
1 – breaking of the top node
2 – breaking of the lower external node
3 – breaking of the lower internal node

Global solutions

(a) (b)

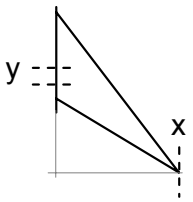

x – installing a restraining system to avoid the base sliding outward

y – anchoring the wall plate to the wall

WARNING: if the y solution is not possible, the wall plate to wall interface shall guarantee enough friction as to prevent the upward sliding of the shore.

Local solutions

1 Wall plate-main raker node

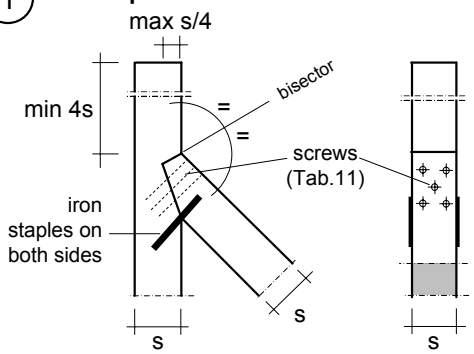

Table 11 – Screws and bolts

section	screws	bolts
13 x 13	5 ϕ10 x150	2 ϕ16
15 x 15	5 ϕ12 x180	3 ϕ16
18 x 18	5 ϕ12 x200	4 ϕ16
20 x 20		

WARNING: Iron staples min ϕ8 or timber slabs on both sides of the wall plate (2.5cm thickness, nailed or screwed)

3 Wall plate-lower raker node

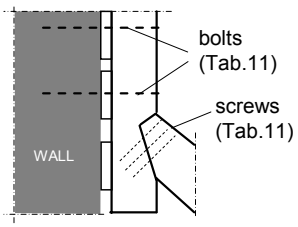

WARNING:
the bolts shall punch the stringers (if drilling the wall is not possible, follow previous global solutions)

2 Lower node

a

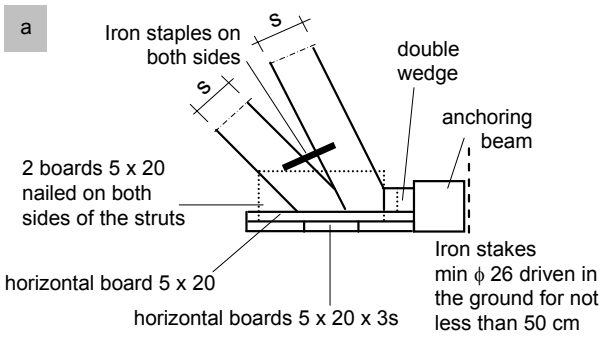

b

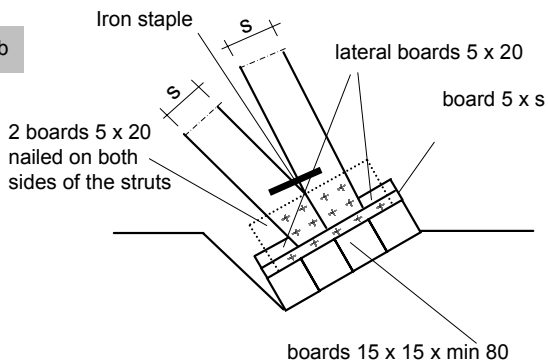

NOTE: both (a) and (b) are possible.

WARNING: The joint notch should never go deeper than s/4

© CNVVF- Using allowed under CNVVF supervision

FLYING RAKERS: anchoring solutions for the base

STOP-**PR**/S

Solution for the base (2a)

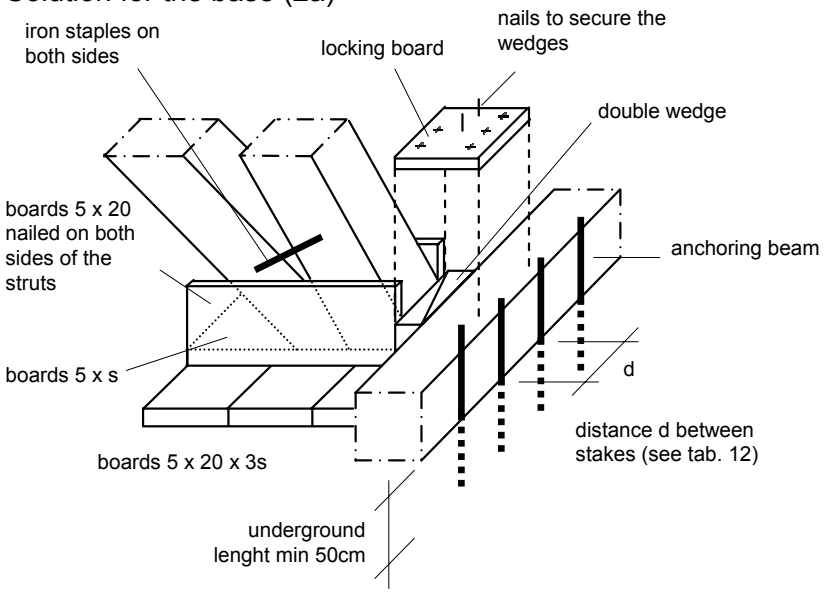

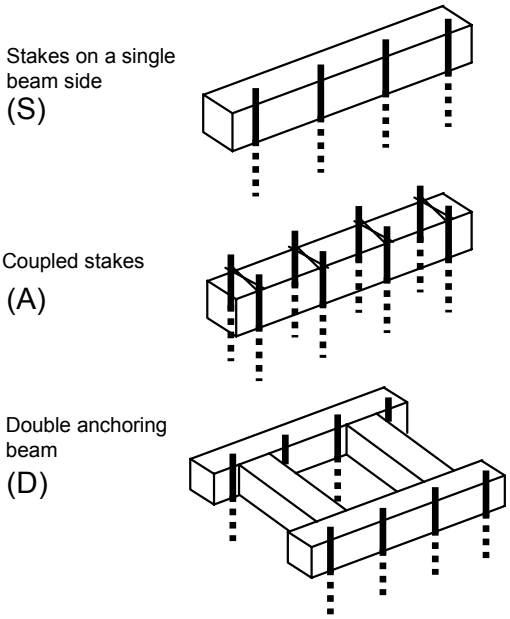

WARNING: remember to install protective elements over the stakes.

Table 12 - Distance d between the stakes

STAKES FOR ANCHORING	R1		R2		R3	
wall thickness s_m	≤0.6m	0.6<s_m≤1.0m	≤0.6m	0.6<s_m≤1.0m	≤0.6m	0.6<s_m≤1.0m
seismic class A	1 Ø26 every 50 cm (S)	1 Ø26 every 40 cm (S)	1 Ø26 every 30 cm (S)	1 Ø26 every 25 cm (S) or 40 cm on two rows (A) o (D)	1 Ø26 every 12.5 cm (S) or every 25 cm on two rows (A) o (D)	1 Ø26 every 10 cm (S) or every 20 cm on two rows (A) o (D)
seismic class B	1 Ø26 every 60 cm (S)	1 Ø26 every 50 cm (S)	1 Ø26 every 40 cm (S)	1 Ø26 every 30 cm (S) or 50 cm on two rows (A) o (D)	1 Ø26 every 15 cm (S) or every 30 cm on two rows (A) o (D)	1 Ø26 every 12.5cm (S) or every 25 cm on two rows (A) o (D)

NOTE: given the same distance between the stakes, when the (S) solution is allowed, also (A) and (D) are; if the (A) solution is allowed, also (D) is.

Solution for the base (2b)

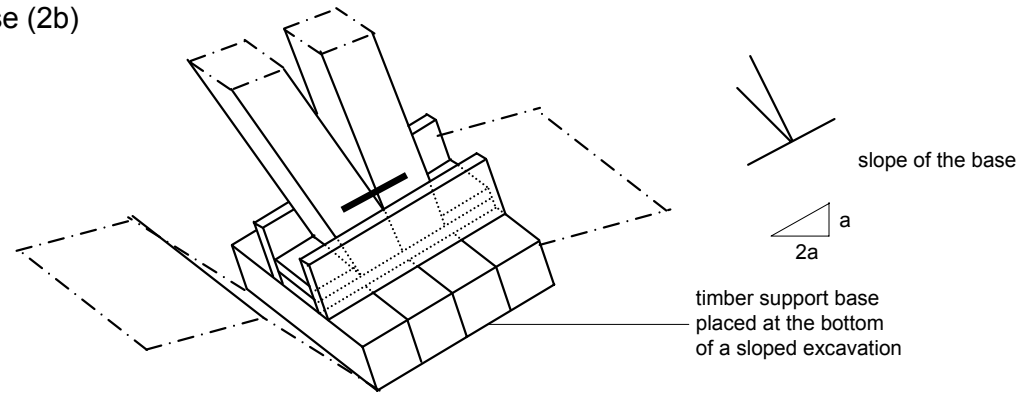

© CNVVF- Using allowed under CNVVF supervision

TIMBER FLYING RAKER SHORES

Field of application
These solutions shall be used to support buildings damaged by earthquakes.

General assumptions
These raker shores shall be employed to restrain load bearing masonry walls not exceeding 1m thick. Two solutions are proposed: the tables R1, R2 and R3 shall be used for both “single point base” and “short solid sole base” shores having the same height H.
“H” is defined as the difference in height between the sole lower point and the main raker upper edge. This edge should be placed at a corresponding insertion point on the other side of the restrained wall, as for example a slab, a vault, an arch, or an perpendicular wall, in order to effectively transfer the forces to the raker shore.
Given the height “H”, the raker shore type R1, R2, or R3 is therefore chosen using table 7 at page 9/15. When H>7.0m, using laminated timber or steel instead of ordinary timber is recommended, and specific design of the raker shore is required.
Given the thickness of the restrained wall “s_m” and the seismic class (see Annex 1), once the span “D” and the sole length “B” are chosen, the raker shore shall be sized using table 8 for R1 type, table 9 for R2 type, table 10 for R3 type.
Many raker shore elements share the same section size to ease timber procurement and simplify the shore’s connections.
On page 13/15 main construction critical considerations are listed, and corresponding solutions are showed. Some construction details of the shore’s connections are proposed.
On page 14/15 two kinds of construction details for anchoring of the sole are shown.
In particular the sole anchoring should prevent the sole from sliding.

WARNING
All the provided dimensions are intended as minimum values. During the construction phase, thicker sections can be used, if available.

© CNVVF- Using allowed under CNVVF supervision

INTENTIONALLY BLANK PAGE

© CNVVF- Using allowed under CNVVF supervision

VADEMECUM STOP

TIMBER WALL TO WALL SHORES (horizontal and sloped)

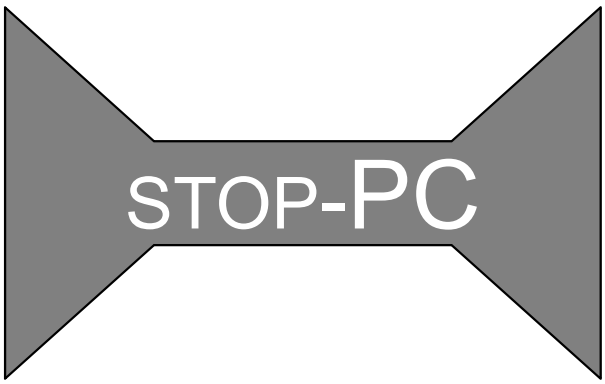

© CNVVF- Using allowed under CNVVF supervision

ABRUZZO EARTHQUAKE 2009
COORDINATION TEAM FOR TEMPORARY WORKS

WORKING GROUP FOR THE VADEMECUM STOP
under the supervision of Sergio Basti - Central director for emergency and urgent technical rescue
manual licensed by note no. EM3064/5001-11 dated 2009-06-15

S.Grimaz (coordinator)
L.Munaro, M.Cavriani, E.Mannino, C.Bolognese, M.Caciolai, L.Ponticelli,
M.Bellizzi, A. D'Odorico, A.Maiolo

With the contribute of:
F.Barazza, P.Malisan, A.Moretti

Translated by:
L. Ponticelli, S. La Mendola, E. Gissi
and
Keith Bellamy
Section Leader, Urban Search & Rescue
Hampshire Fire and Rescue Service, UK

© CNVVF- Using allowed under CNVVF supervision

TIMBER WALLL TO WALL SHORES: general recommendations

STOP-**PC**

Movement to constrain:

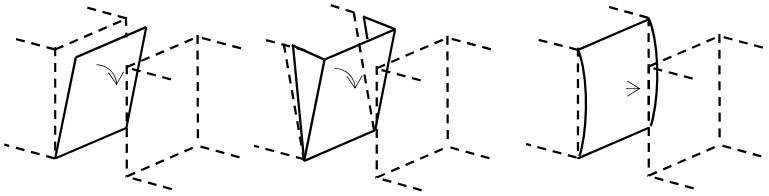

rotation bulging

Description

The intervention consists of the placement of a supporting timber structure between buildings that are not too far apart.

Warning

The intervention is allowed only under the permission of local Authorities because of the possibilities of damages to the support building due to aftershocks.

Function of the shore: to prevent further rotation or bulging of the wall.

SELECTION CRITERIA

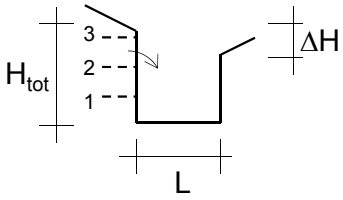

The use of the present procedure is allowed if:
$L \leq 8.0$ m, $H_{tot} \leq 9.0$m, $\Delta H \leq 4.0$m
(see below)

If $L > 8.0$ m or $\Delta H > 4.0$m or the number of the floors is more than 3 or $H_{tot} > 9.0$m, other specific procedures are required

SCENARIO	SOLUTION
The heigth of the wall to be supported is the same as the heigth of the supporting wall 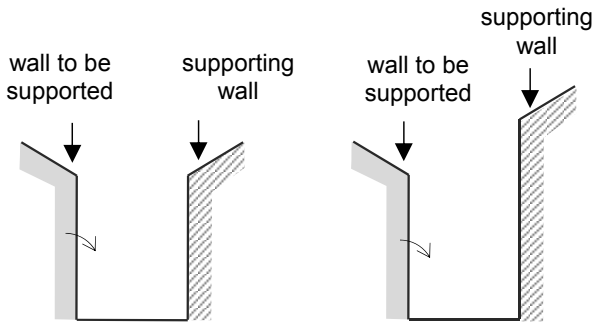	P PARALLEL SHAPE 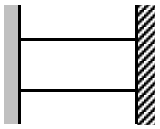
The wall to be supported is higher than the supporting wall 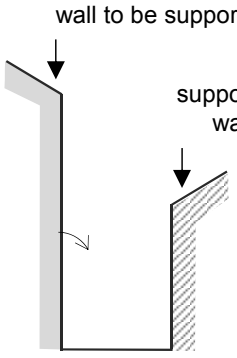	S SLOPE SHAPE 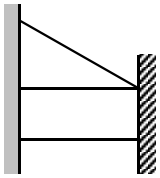

© CNVVF- Using allowed under CNVVF supervision

PARALLEL SHAPE SHORE: main scenarios

STOP-**PC**

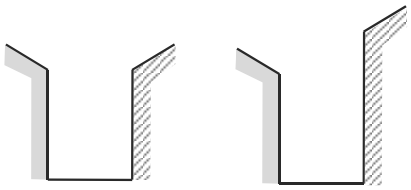

P

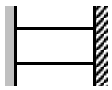

PARALLEL SHAPE

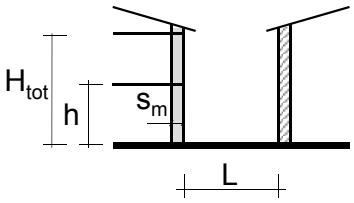

MAIN SCENARIOS

P	a L ≤ h	b h < L ≤ 1.5h	c 1.5h < L ≤ 2h
1 Shoring at the first floor	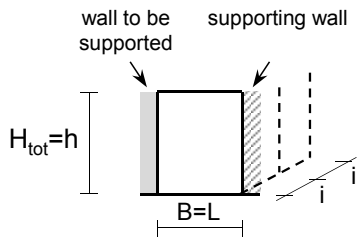 1a	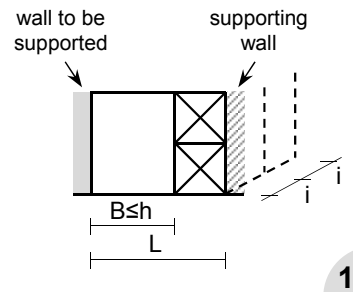 1b	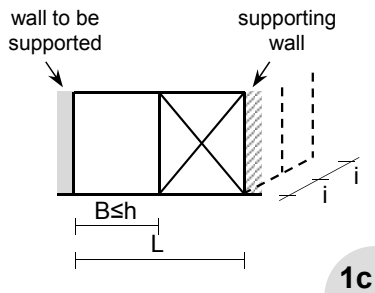 1c
2 Shoring at the second floor	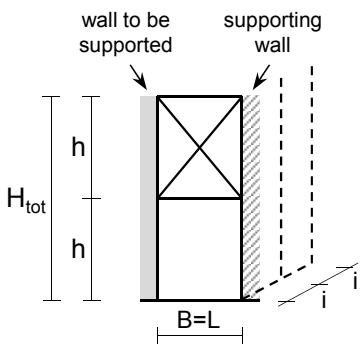 2a	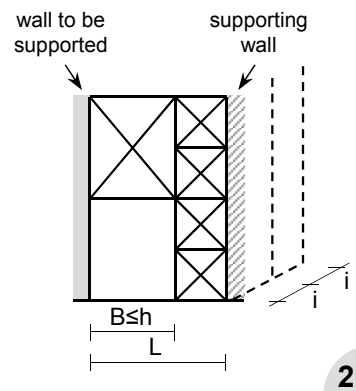 2b	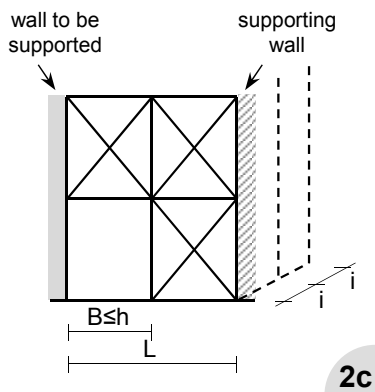 2c
3 Shoring at the third floor	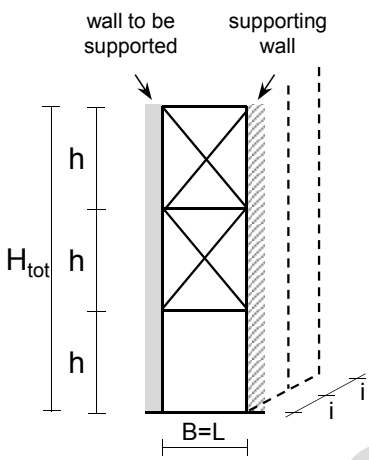 3a	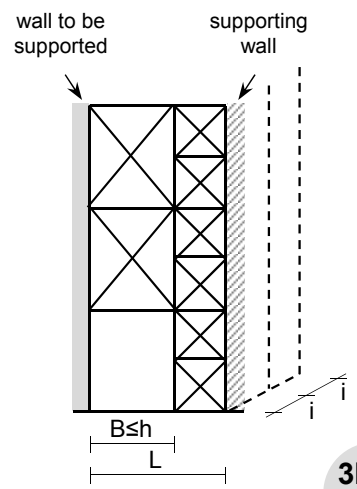 3b	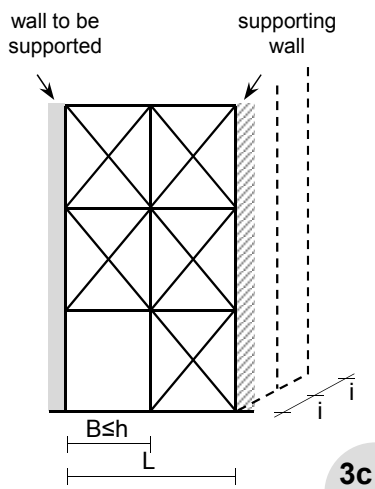 3c

© CNVVF- Using allowed under CNVVF supervision

SLOPED SHORE: main scenarios

STOP-**PC**

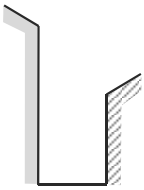

S SLOPING SHAPE

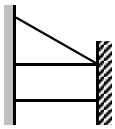

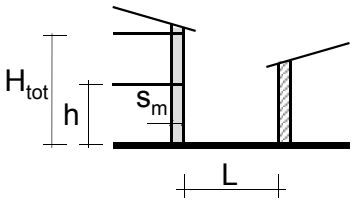

MAIN SCENARIOS

S	**a** L ≤ h	**b** h < L ≤ 1.5h	**c** 1.5h < L ≤ 2h
2 Shoring from the second to the first floor	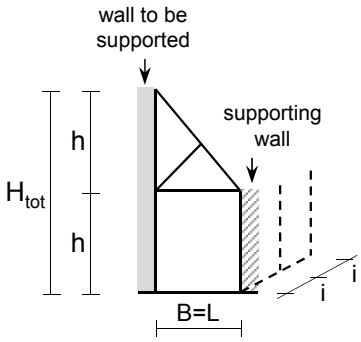 **2a**	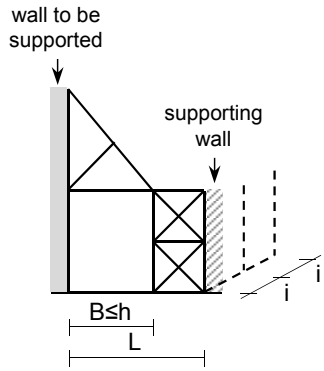 **2b**	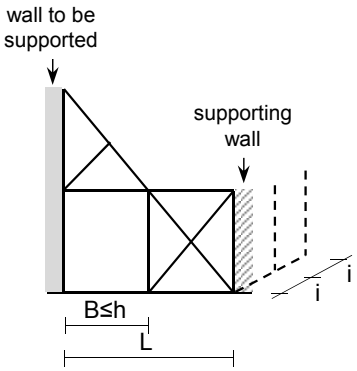 **2c**
3 Shoring from the third to the second floor	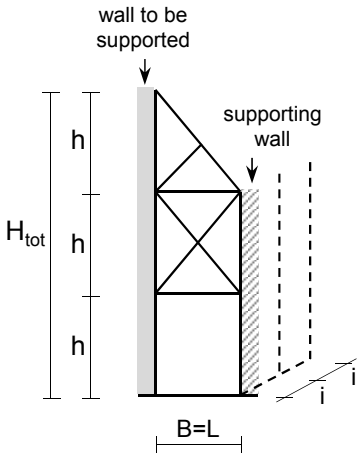 **3a**	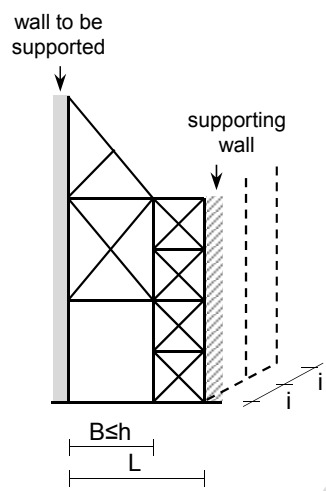 **3b**	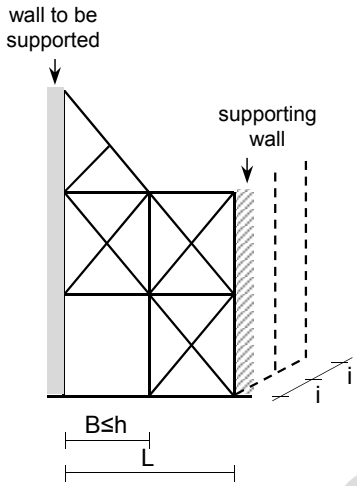 **3c**

© CNVVF- Using allowed under CNVVF supervision

HORIZONTAL SHORE: sizing

STOP-**PC**

Structural sketches

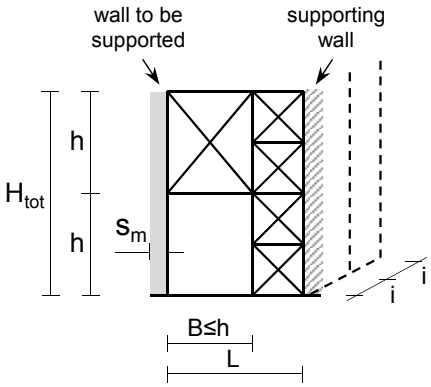

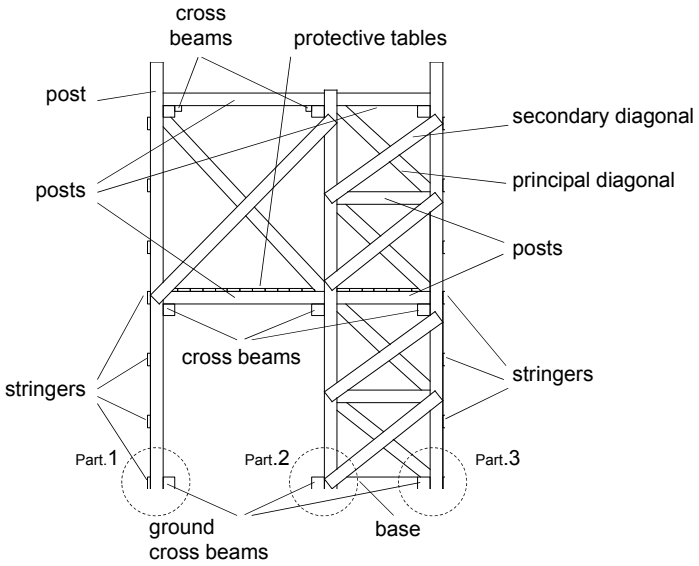

See pages from 8/14 to 12/14

Table 1 – Horizontal shore: sizing of the main elements

P	Minimum dimensions of UPRIGHTS, POSTS, CROSS BEAMS AND DIAGONAL TIMBERS							
	Seismic class A *				Seismic class B *			
Height H_{tot} (m)	Maximum width of the wall to be supported: $s_m \leq 0.6$ m		Maximum width of the wall to be supported: 0.6 m < $s_m \leq 1.0$ m		Maximum width of the wall to be supported: $s_m \leq 0.6$ m		Maximum width of the wall to be supported: 0.6 m < $s_m \leq 1.0$ m	
	Section (cmxcm)	Distance between the axes i (m)	Section (cmxcm)	Distance between the axes i (m)	Section (cmxcm)	Distance between the axes i (m)	Section (cmxcm)	Distance between the axes i (m)
6m<H_{tot} ≤9m	20 x 20	max 2.0	20 x 20	max 1.5	20 x 20	max 2.0	20 x 20	max 2.0
3m<H_{tot} ≤6m	18 x 18	max 2.0	20 x 20	max 2.0	15 x 15	max 2.0	18 x 18	max 2.0
H_{tot} ≤3m	15 x 15	max 2.0	18 x 18	max 2.0	13 x 13	max 2.0	15 x 15	max 2.0

(*) For the seismic classes see the Annex 1
If no Annex 1 is provided, seismic class A should be used

Secondary elements	
base	as the main elements
locking elements (see page 7/14)	as the main elements
ground cross beams	sections 15x15 cm or more
cross beams	sections 10x10 cm
secondary diagonal	boards 5x20 cm screwed/nailed by 3 screws Ø5x100 mm or by 3 nails L = 100 mm each edge placed on both the sides of the principal diagonal
stringers	boards 5 x 20 cm with 1 m as the max distance between centres placed on the continuous parts of the wall
protective tables	boards 5x20 cm

The dimensions in table 1 can be used for all the configurations showed on page 2/14

© CNVVF- Using allowed under CNVVF supervision

HORIZONTAL SHORE: sizing

STOP-**PC**

Structural sketches

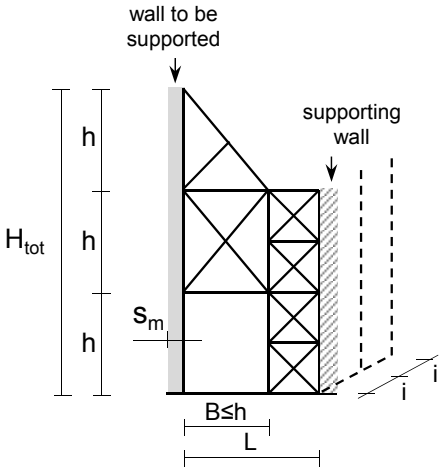

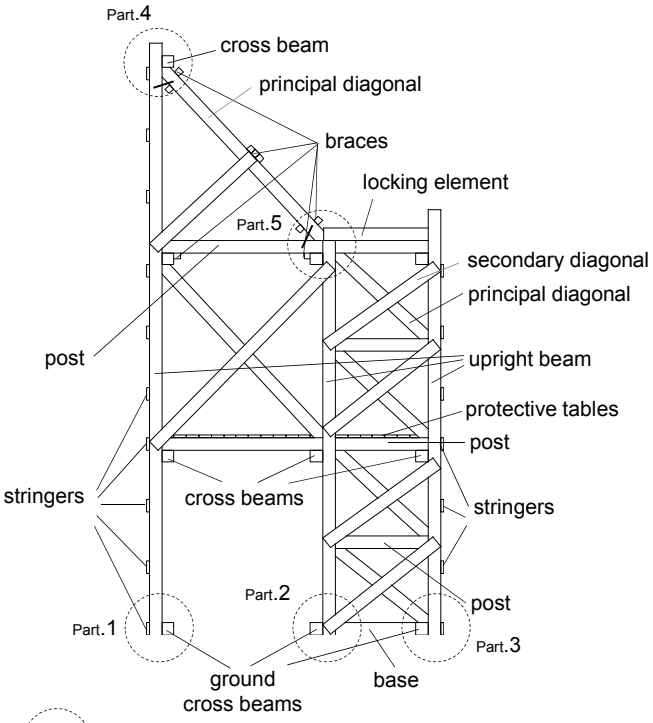

See pages from 8/14 to 12/14

Table 2 - Sloped shore: sizing of the main elements

S	Minimum dimensions of UPRIGHTS, POSTS, CROSS BEAMS AND PRINCIPAL DIAGONAL TIMBERS							
	Seismic class A *				Seismic class B *			
Height H_{tot} (m)	Maximum width of the wall to be supported: $s_m \leq 0.6$ m		Maximum width of the wall to be supported: 0.6 m < $s_m \leq 1.0$ m		Maximum width of the wall to be supported: $s_m \leq 0.6$ m		Maximum width of the wall to be supported: 0.6 m < $s_m \leq 1.0$ m	
	Section (cmxcm)	Distance between the axes i (m)	Section (cmxcm)	Distance between the axes i (m)	Section (cmxcm)	Distance between the axes i (m)	Section (cmxcm)	Distance between the axes i (m)
6m<H_{tot} ≤9m	18 x 18	max 2.0	20 x 20	max 2.0	15 x 15	max 2.0	18 x 18	max 2.0
3m<H_{tot} ≤6m	15 x 15	max 2.0	18 x 18	max 2.0	15 x 15	max 2.0	15 x 15	max 2.0

(*) For the seismic classes see the Annex 1
If no Annex 1 is provided, seismic class A should be used

Secondary elements	
base	as the main elements
locking elements (see page 7/14)	as the main elements
ground cross beams	sections 15x15 cm or more
cross beams	sections 10x10 cm
secondary diagonal	boards 5x20 cm screwed/nailed by 3 screws Ø5x100 mm or by 3 nails L = 100 mm each edge placed on both the sides of the principal diagonal
stringers	boards 5 x 20 cm with 1 m as the max distance between centres placed on the continuous parts of the wall
protective tables	boards 5x20 cm

The dimensions in table 2 can be used for all the configurations showed on page 3/14

© CNVVF- Using allowed under CNVVF supervision

TIMBER WALLL TO WALL SHORES: critical considerations

STOP-**PC**

Critical consideration
Posts could punch through the supporting wall

Safety criteria:
position the posts in line with perpendicular walls attached to the supporting wall

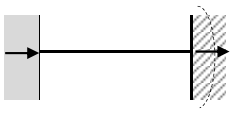

Plan

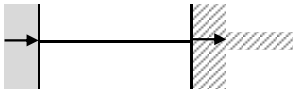

Plan

Critical consideration
The supported structure could impact on the supporting wall.

Safety criteria:
if it is not possible to position the posts in line with perpendicular walls a 10x10 sections horizontal distribution substructure should be provided.

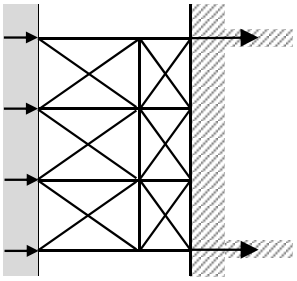

Plan

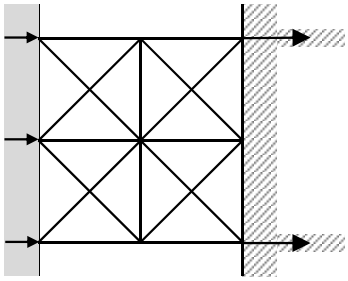

Plan

Floors at the same height

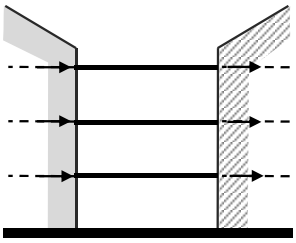

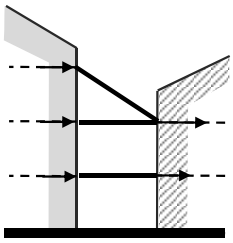

Vertical section

Safety criteria:
the principal diagonals and the posts should be positioned in line with the floors.

Floors at different height

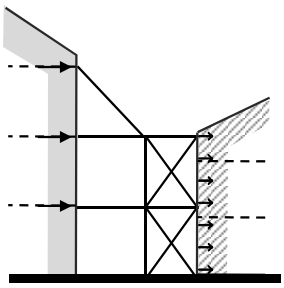

Vertical section

Critical consideration
The supported structure could impact on the supporting wall

Safety criteria:
a vertical distribution substructure should be provided

KEY wall to be supported supporting wall

© CNVVF- Using allowed under CNVVF supervision

TIMBER WALLL TO WALL SHORES: safety instructions

STOP-**PC**

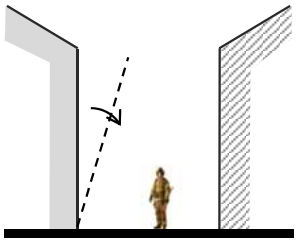

Vertical section

Critical consideration

The wall to be supported could collapse during the shoring operations.

Safety instruction:
build the modular elements of the shore in a safe zone

ASSEMBLING THE ELEMENTS

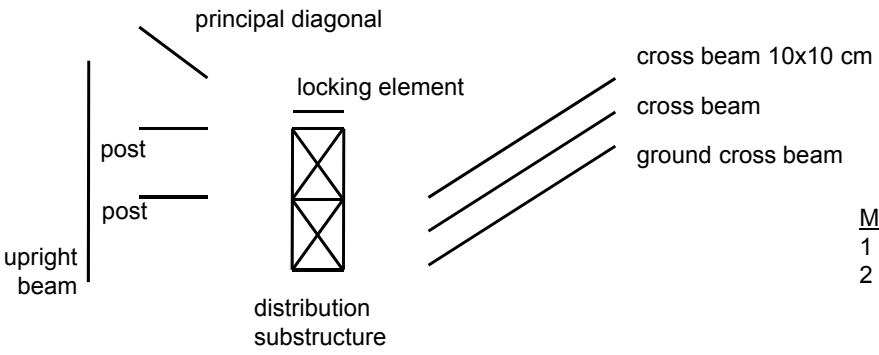

Main phases:
1 – measuring of the elements
2 – building of the shore in a safe zone

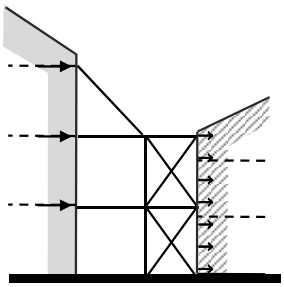

Vertical section

Assembling criteria:
1 – positioning of the upright beams on the side of the wall to be supported and the distribution substructure on the opposite side
2 – positioning of the posts
3 – positioning of the principal diagonals and the locking elements
4 – positioning of the protective tables
5 – complete the shore

© CNVVF- Using allowed under CNVVF supervision

TIMBER WALLL TO WALL SHORES: construction details

Detail 1	BASE ANCHORAGE ON THE SIDE OF THE WALL TO BE SUPPORTED
BASE ANCHORAGE WITH EXTERNAL SUPPORT	VERTICAL SECTION 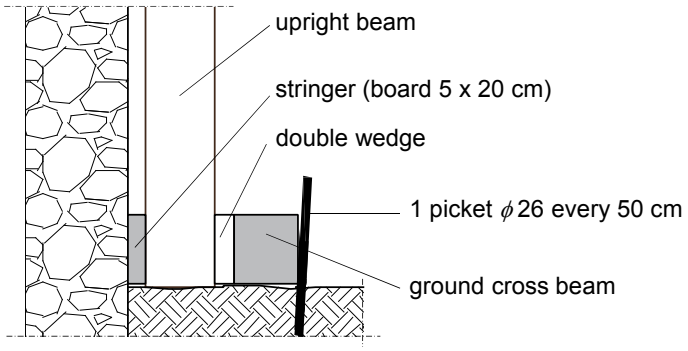 PLAN 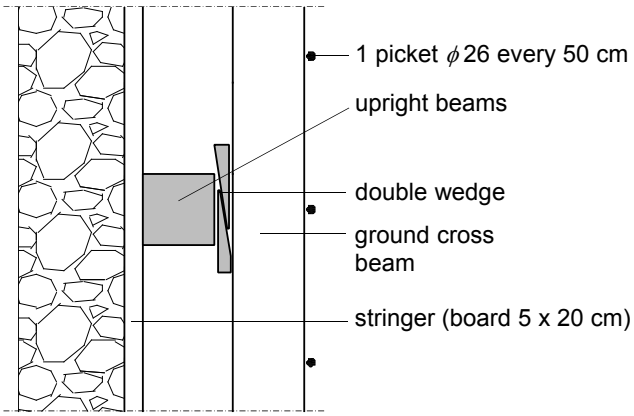

© CNVVF- Using allowed under CNVVF supervision

TIMBER WALLL TO WALL SHORES: construction details

STOP-**PC**

Detail **2**	BASE ANCHORAGE ON THE SIDE FURTHEST FROM THE SUPPORTING WALL

BASE ANCHORAGE WITH EXTERNAL SUPPORT

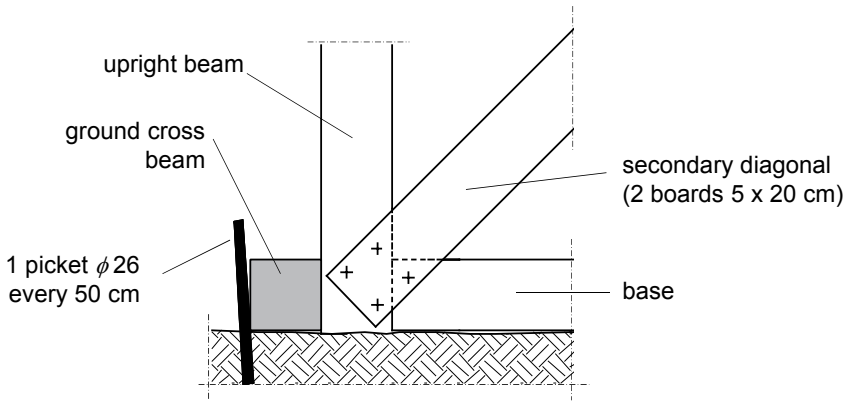

VERTICAL SECTION

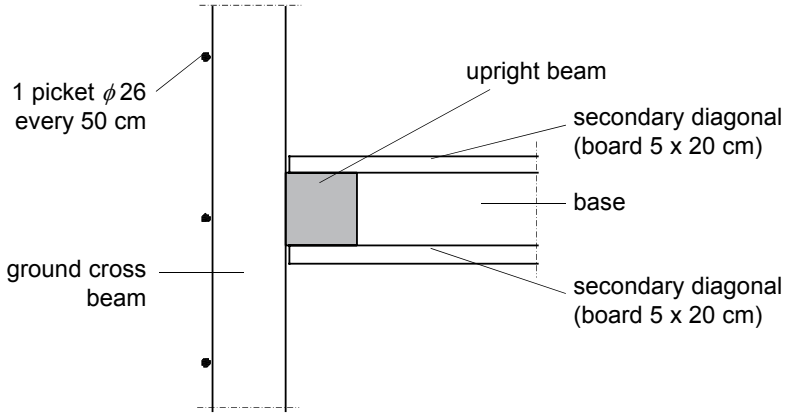

PLAN

© CNVVF- Using allowed under CNVVF supervision

Detail 3 — BASE ANCHORAGE ON THE SIDE NEAREST THE SUPPORTING WALL

BASE ANCHORAGE WITH EXTERNAL SUPPORT

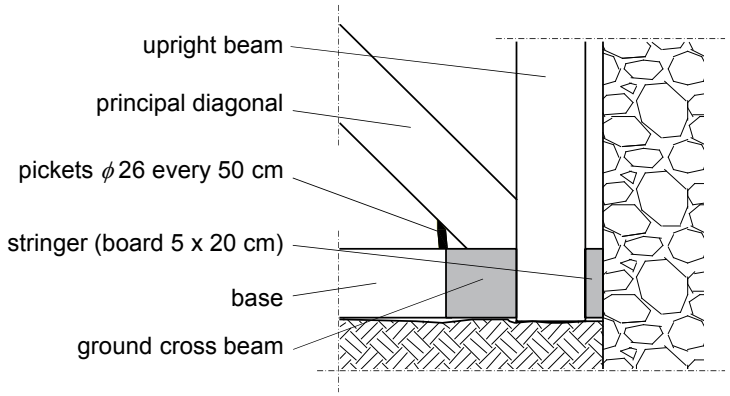

VERTICAL SECTION

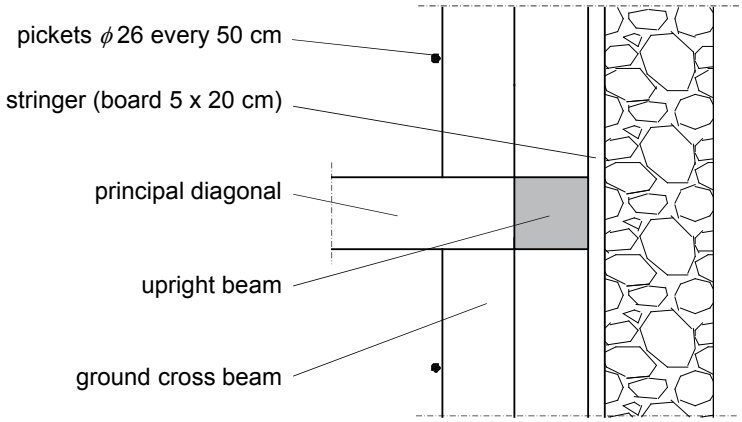

PLAN

© CNVVF- Using allowed under CNVVF supervision

TIMBER WALLL TO WALL SHORES: construction details

STOP-**PC**

Detail **4**	UPPER CONNECTION

CONNECTION BETWEEN THE UPRIGHT BEAM AND THE PRINCIPAL DIAGONAL ON THE SIDE OF THE WALL TO BE SUPPORTED

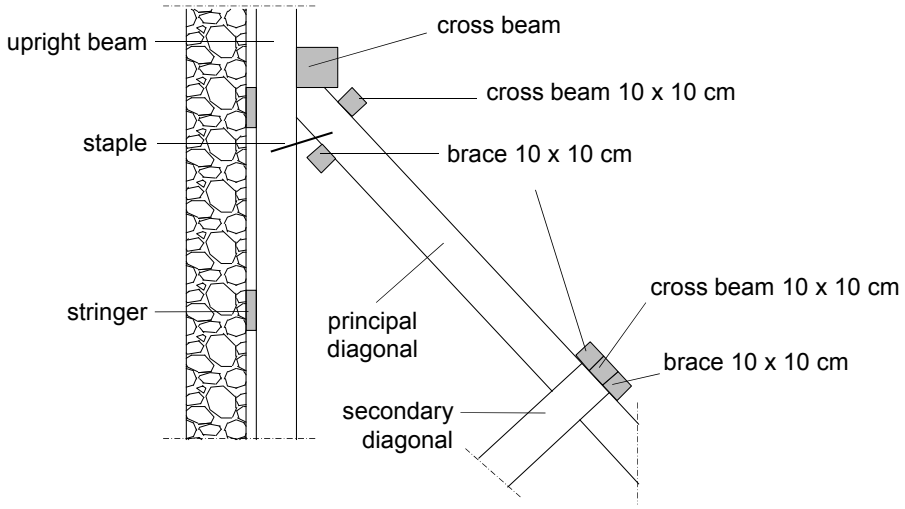

VERTICAL SECTION

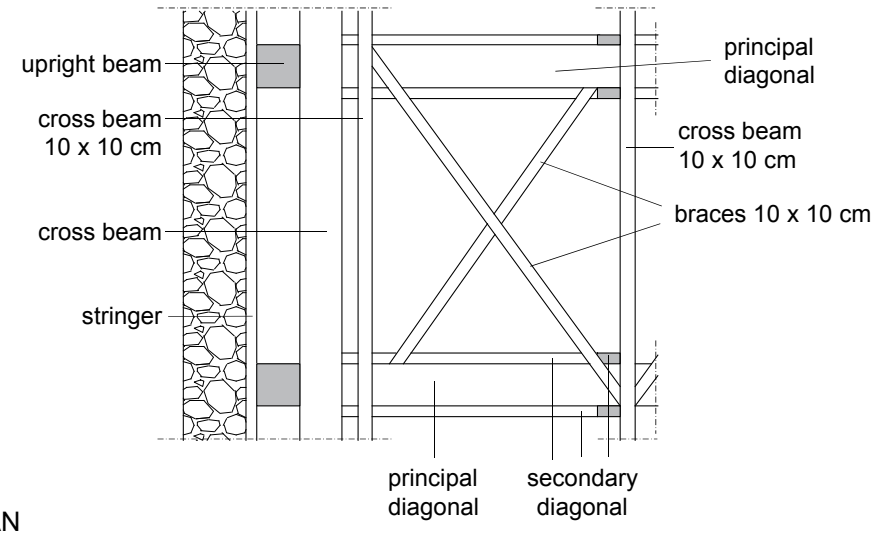

PLAN

© CNVVF- Using allowed under CNVVF supervision

TIMBER WALLL TO WALL SHORES: construction details

STOP-**PC**

Detail 5 — LOWER CONNECTION

CONNECTION BETWEEN THE PRINCIPAL DIAGONAL AND THE POST

! WARNING

The locking element should be linked to the post using at least 1 bolt ϕ10 every 50cm.

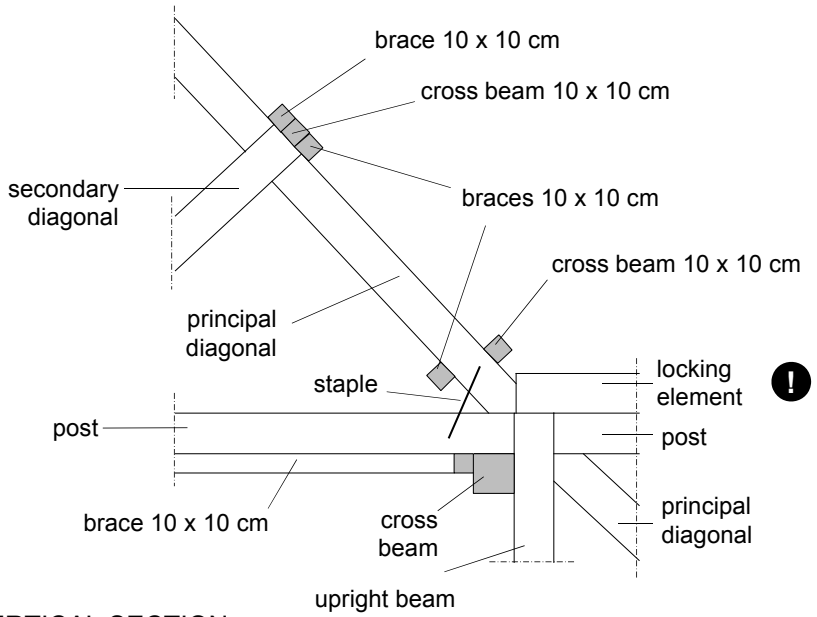

VERTICAL SECTION

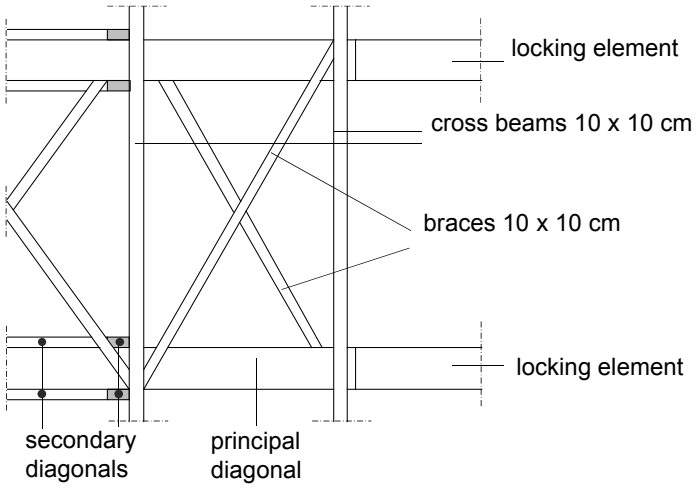

PLAN

© CNVVF- Using allowed under CNVVF supervision

TIMBER WALLL TO WALL SHORES: assembling phases

STOP-**PC**

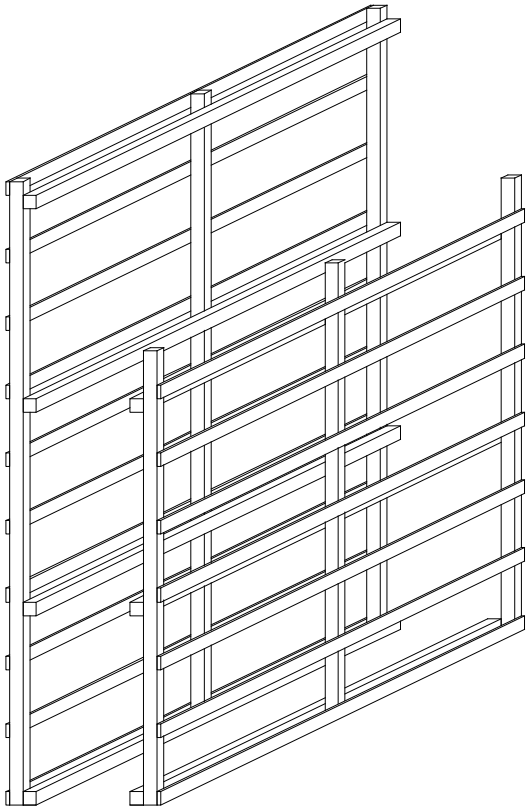

Stage 1 – Building of the trellises

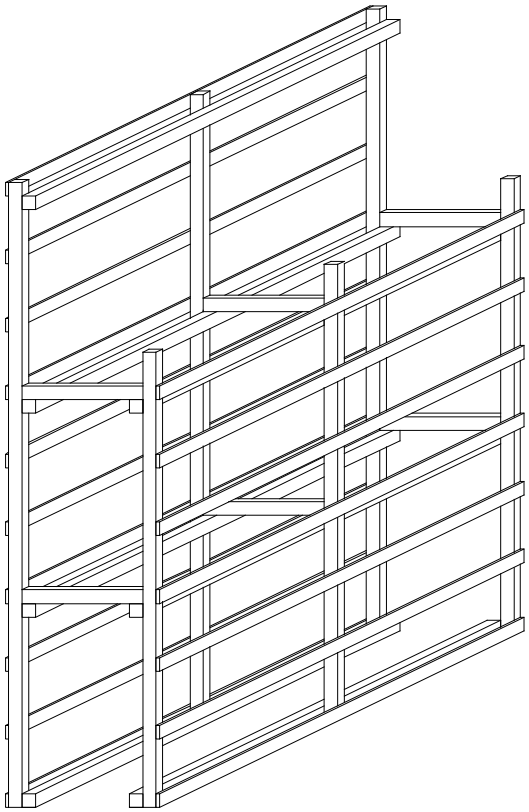

Stage 2 – Joining of the trellises

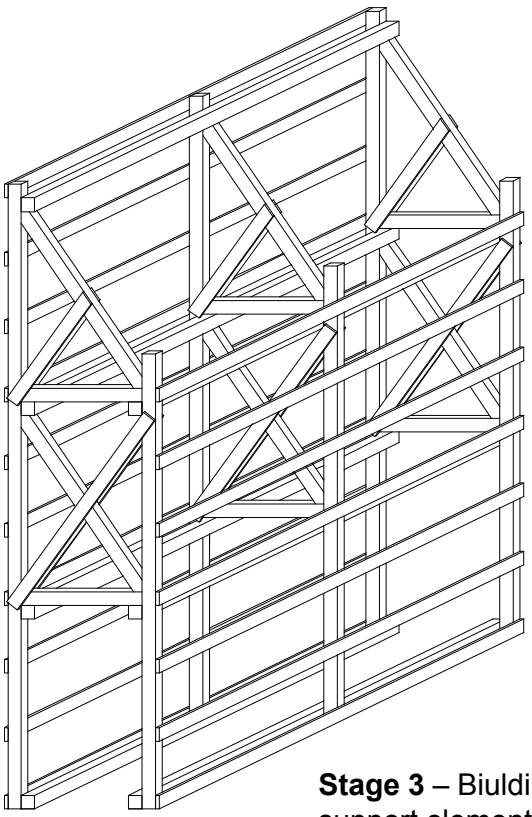

Stage 3 – Biulding of the support elements

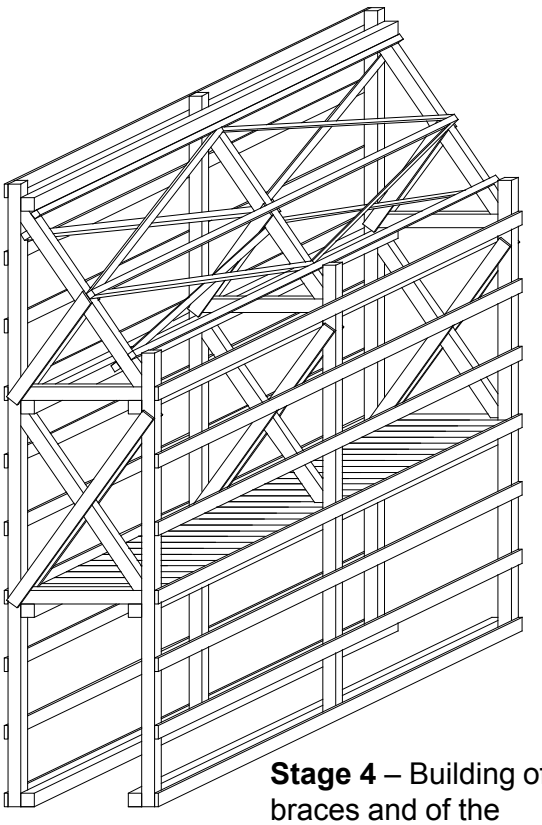

Stage 4 – Building of the braces and of the protective tables

© CNVVF- Using allowed under CNVVF supervision

TIMBER WALL TO WALL SHORES

Field of application

The use of this procedure is allowed only with 9 m high masonry structures and only for wall thickness of 1 m. The maximum free height of the wall is 8 m.
The maximum distance between the wall to support and the supporting wall is 2 times the distance between two consecutive floors (h).
The supporting structure should be made of wood.

General assumptions

The intervention is allowed only under the permission of local Authorities because of the possibility of damage to the supporting building due to aftershocks. Check the solutions to the critical considerations shown on page 6/14.

Instructions for the use of the procedure

After the check of the site to be shored, define the type of the shore (P or S) on pages 1/14, 2/14 and 3/14.
On page 4/14 the table to size the parallel shape shore (P) is shown.
On page 5/14 the table to size the slope shape shore (S) is shown.
The sizing of the shore's elements is dependent on: the type of the shore (P o S), the total height of the wall to support (H_{tot}), the thickness of the wall to support (s_m) and of the seismic classification (see the Annex 1).
On the pages 6-7/14 the main critical considerations are shown.
On the pages 8-12/14 the details of the shore structure are shown.

© CNVVF- Using allowed under CNVVF supervision

VADEMECUM STOP

SHORES FOR APERTURES

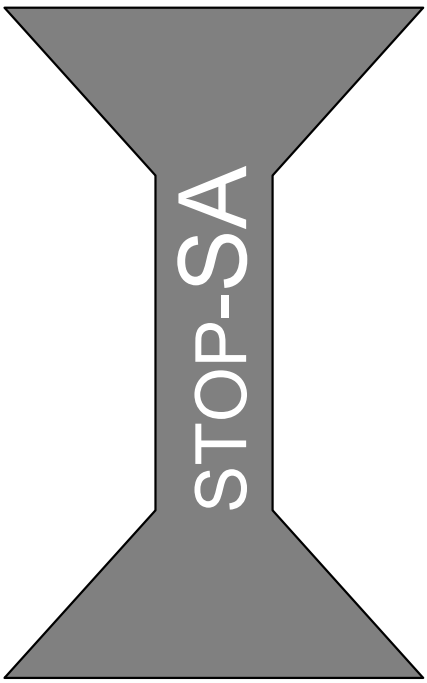

© CNVVF- Using allowed under CNVVF supervision

ABRUZZO EARTHQUAKE 2009
COORDINATION TEAM FOR TEMPORARY WORKS

WORKING GROUP FOR THE VADEMECUM STOP
under the supervision of Sergio Basti - Central director for emergency and urgent technical rescue
manual licensed by note no. EM3064/5001-11 dated 2009-06-15

S.Grimaz (coordinator)
L.Munaro, M.Cavriani, E.Mannino, C.Bolognese, M.Caciolai, L.Ponticelli,
M.Bellizzi, A. D'Odorico, A.Maiolo

With the contribute of:
F.Barazza, P.Malisan, A.Moretti

Translated by:
L. Ponticelli, S. La Mendola, E. Gissi
and
Keith Bellamy
Section Leader, Urban Search & Rescue
Hampshire Fire and Rescue Service, UK

© CNVVF- Using allowed under CNVVF supervision

SHORES FOR APERTURES: general recommendations

STOP-**SA**

Movement to constrain:
breaking of a lintel
and lateral distortion (if present)

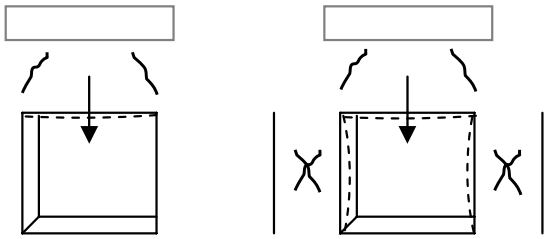

Description
Potential fall of blocks over the opening and loss of restrainment of the slab.

Lateral distorsion of the walls.

Function of the shore: to restrain the vertical loads

SHORE ONLY

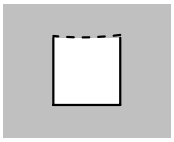

"TIGHT" OPENINGS
(L ≤ 1.5 m)

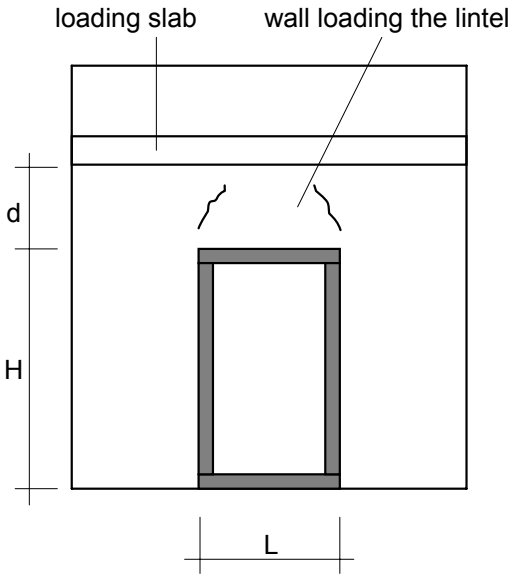

"LARGE" OPENINGS
(1.5 m < L ≤ 3.0 m)

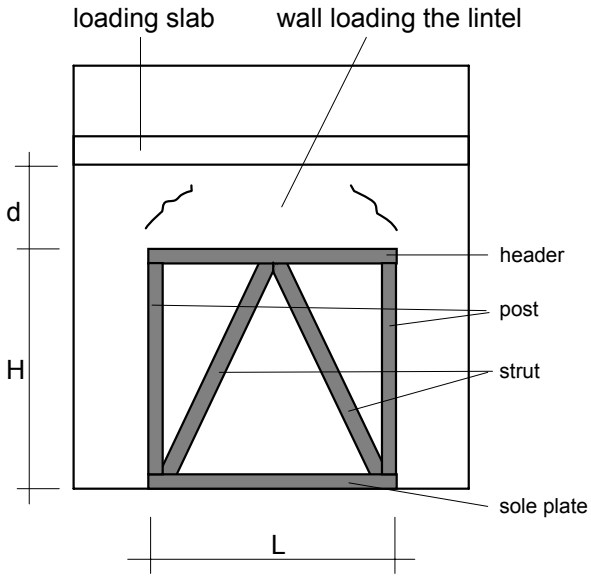

SHORE AND STIFFEN

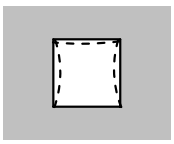

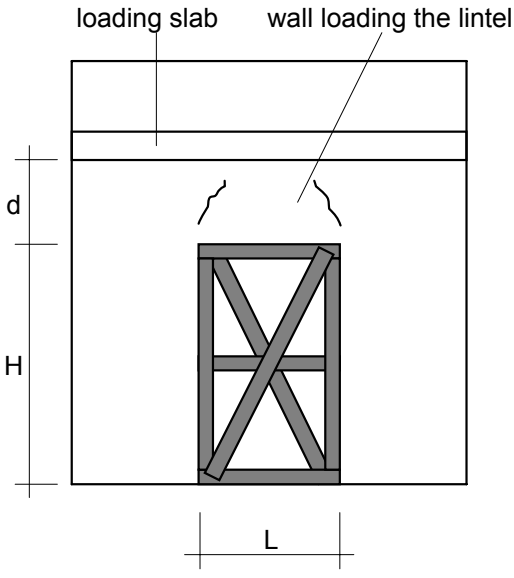

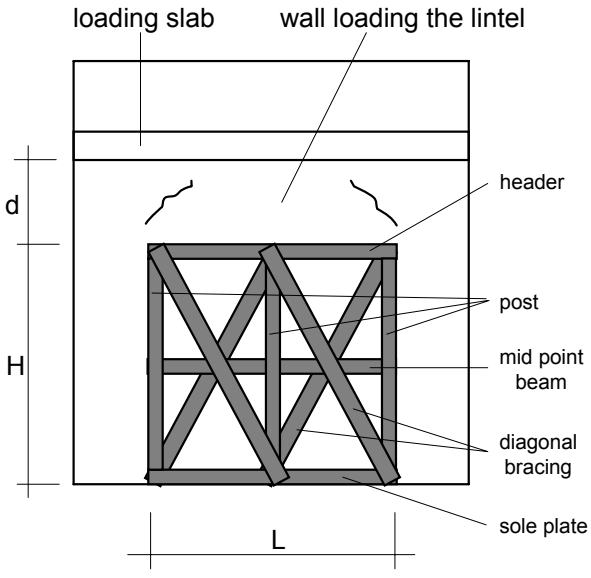

© CNVVF- Using allowed under CNVVF supervision

SHORES FOR APERTURES: general recommendations

STOP-**SA**

External wall

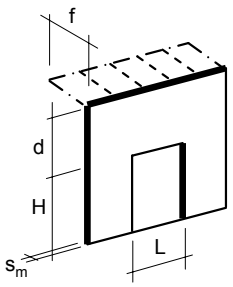

Internal wall

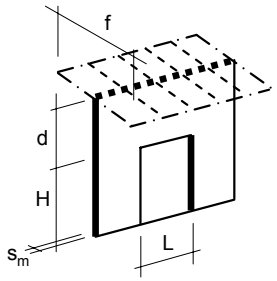

Table 1 – Sizing of the elements (posts, struts and mid point beams)

		Width of loading slab f	s_m ≤ 0.4 m single	s_m ≤ 0.4 m double	s_m 0.4 - 0.6 m double	s_m 0.6 - 0.8 m double	s_m 0.8 - 1.0 m double
			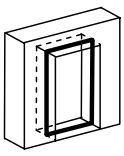	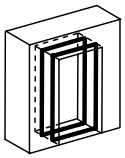	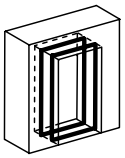	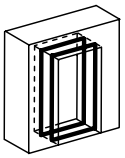	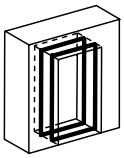
"Tight" openings	L ≤1.0 m	f = 0m	10x10	8x8	8x8	8x8	10x10
		0m < f ≤ 1m	13x13	10x10	10x10	10x10	13x13
		1m < f ≤ 3m	18x18	13x13	13x13	13x13	13x13
		3m < f ≤ 5m	n.p.	15x15	15x15	15x15	18x18
	1.0 m<L≤1.5 m	f = 0m	13x13	10x10	13x13	13x13	13x13
		0m < f ≤ 1m	18x18	13x13	15x15	15x15	15x15
		1m < f ≤ 3m	n.p.	18x18	18x18	18x18	18x18
		3m < f ≤ 5m	n.p.	18x18	20x20	20x20	20x20
"Large" openings	1.5 m<L≤2.0 m	f = 0m	13x13	10x10	10x10	13x13	13x13
		0m < f ≤ 1m	15x15	13x13	13x13	13x13	15x15
		1m < f ≤ 3m	20x20	15x15	15x15	18x18	18x18
		3m < f ≤ 5m	n.p.	18x18	18x18	20x20	20x20
	2.0 m<L≤3.0 m	f = 0m	18x18	13x13	15x15	18x18	18x18
		0m < f ≤ 1m	20x20	15x15	18x18	18x18	20x20
		1m < f ≤ 3m	n.p.	20x20	20x20	n.p.	n.p.

n.p. - not present: a specific design is needed

Other elements	
Braces	Planks 2.5 x 12 cm screwed/nailed on the struts by 3 screws Ø5x100 mm or by 3 nails L = 80 mm each edge for sections not bigger than 15x15 *or* Planks 5 x 20 cm screwed/nailed on the struts by 3 screws Ø5x100 mm or by 3 nails L = 100 mm each edge for sections bigger than 15x15

WARNING:
If **d > L** no loading slab should be considered.
If the slab is ribbed parallel to the wall, the width of the loading slab should be safely assumed as 1m.

© CNVVF- Using allowed under CNVVF supervision

SHORES FOR APERTURES

Field of application
These shores can be used only on buildings damaged by earthquakes.

General assumptions
These shores transfer the loads from the damaged lintel to the remaining structure, through as much as possible, the previous load path.

In case of necessity, the shores can stiffen the openings. Appropriate bracing should be provided (see page 2/3).

To simplify, only square cross section timber is used.

Instructions for the use of this procedure
By using the dimensions of the opening (height “H” and width “L”), the width “s_m” of the wall and the length of the slab loading the lintel, it is possible to calculate the sizing of the system using table 1 on page 2/3.
Only if the width of the wall is less than 0.4 m, it is possible to use either the single or the double system (see the table1 on page 2/3).

WARNING
All the values should be intended as a minimum. Bigger timbers can be used if necessary.

© CNVVF- Using allowed under CNVVF supervision

INTENTIONALLY BLANK PAGE

© CNVVF- Using allowed under CNVVF supervision

VADEMECUM STOP

SHORES FOR SLABS AND BALCONIES

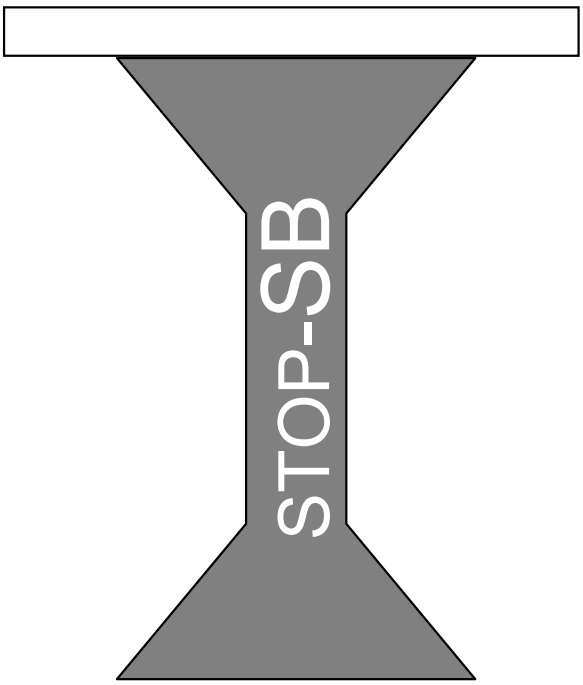

© CNVVF- Using allowed under CNVVF supervision

ABRUZZO EARTHQUAKE 2009
COORDINATION TEAM FOR TEMPORARY WORKS

WORKING GROUP FOR THE VADEMECUM STOP
under the supervision of Sergio Basti - Central director for emergency and urgent technical rescue
manual licensed by note no. EM3064/5001-11 dated 2009-06-15

S.Grimaz (coordinator)
L.Munaro, M.Cavriani, E.Mannino, C.Bolognese, M.Caciolai, L.Ponticelli,
M.Bellizzi, A. D'Odorico, A.Maiolo

With the contribute of:
F.Barazza, P.Malisan, A.Moretti

Translated by:
L. Ponticelli, S. La Mendola, E. Gissi
and
Keith Bellamy
Section Leader, Urban Search & Rescue
Hampshire Fire and Rescue Service, UK

© CNVVF- Using allowed under CNVVF supervision

SHORES FOR SLABS AND BALCONIES: general recommendations

STOP-**SB**

Movement to constrain:
sagging or excessive deflection

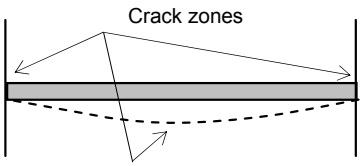

SLAB

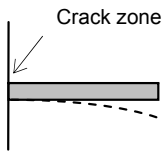

BALCONY

Description
Excessive deflection of the slab due to a vertical seismic acceleration or excessive loads.
Evidence of the damages:
a) For balconies: rotation and cracks at the upper areas of the connections.
b) For slabs: excessive deflection, cracks in the middle on the underside and at the upper areas of the connections.

Function of the shore: to reduce either the deflections and/or the loads

SHORES FOR SLABS: MAIN SCENARIOS AND SELECTION CRITERIA

SCENARIO

- A new single load path to the ground is available
- The ground is solid
- Shores for all the underlying slabs are possible
- Easy to build

- No new load path to the ground is available
  Shores for all the underlying slabs are impossible
- New load path is possible

SOLUTION

S SINGLE LINE
see STOP-**SB**/S (page 2/10)

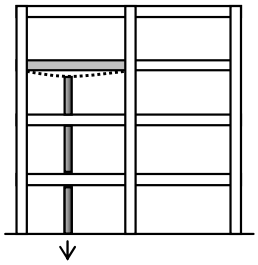

T TRUSS
see STOP-**SB**/T (page 8/10)

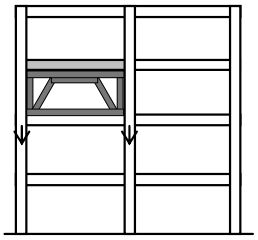

WARNING: correct procedure to implement a single line solution

In the case of a single line solution, it is necessary to start from the bottom of the building and work to the top (see below).

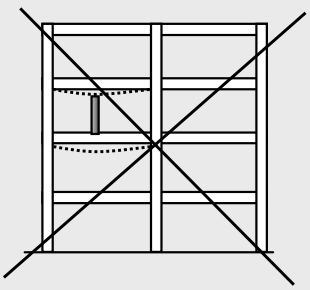

NO

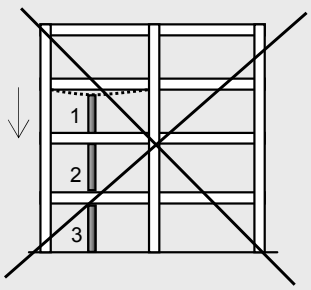

NO

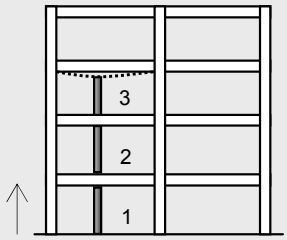

YES

1-2-3 : building sequence

© CNVVF- Using allowed under CNVVF supervision

SHORES FOR SLABS AND BALCONIES "S" SOLUTION: general recommendations

STOP-**SB**/S

Reference sketches

S

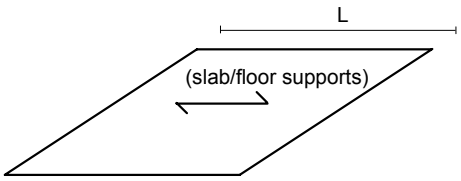

Geometrical parameters

L : span

i : transverse distance between uprights

H : distance between two consecutive floors

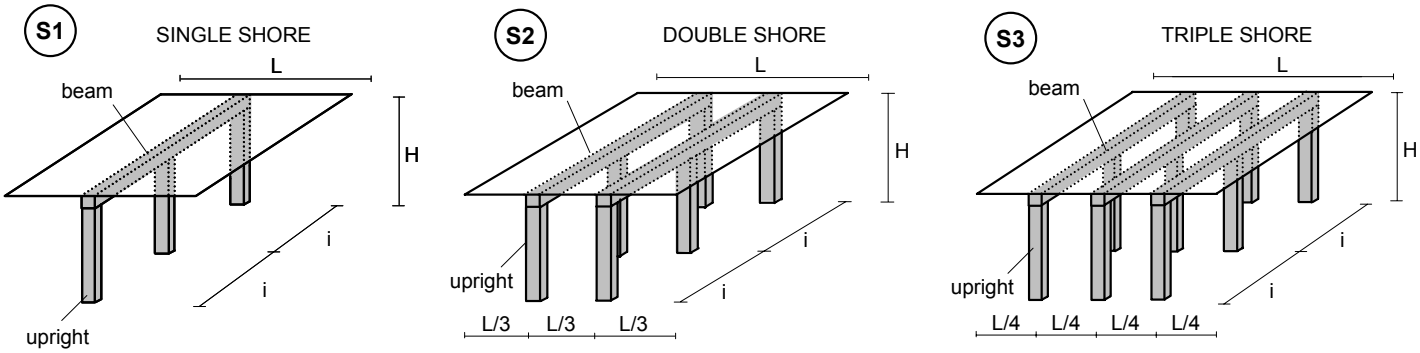

Table 1 – Sizing of the wooden shore
Cross section of the uprights and of the beams (cmxcm) – [reference sketch]

	i (m) \ L (m)	L ≤ 3.0m	3.0m < L ≤ 4.0m	4.0m < L ≤ 5.0m	5.0m < L ≤ 6.0m	6.0m < L ≤ 7.0m
H ≤ 4 m	1.0	13x13-[S1]	13x13-[S1]	13x13-[S2]	13x13-[S3]	13x13-[S3]
	1.5	13x13-[S1]	13x13-[S2]	13x13-[S3]	15x15-[S3]	n.p.
	2.0	15x15-[S2]	15x15-[S2]	15x15-[S3]	n.p.	n.p.
	2.5	15x15-[S3]	n.p.	n.p.	n.p.	n.p.
4m<H≤6m	S1 is not allowed if H > 4m. The same sections used for the sketches S1 and S2 for H ≤ 4m are allowed if properly braced (the bracing system can be implemented using planks 2.5 x 12 cm nailed on the uprights with 3 nails L = 80 mm in both directions).					

Table 2 – Sizing of the shore made with wooden beams and telescopic steel upright struts
Cross section of the beams (cmxcm) – Class of the iron prop (see EN 1065) - [reference sketch]

	i (m) \ L (m)	L ≤ 3.0m	3.0m < L ≤ 4.0m	4.0m < L ≤ 5.0m	5.0m < L ≤ 6.0m	6.0m < L ≤ 7.0m
H< 3 m	1.0	13x13-C30-[S1]	13x13-C30-[S2]	13x13-E30-[S2]	13x13-E30-[S3]	13x13-E30-[S3]
	1.5	13x13-E30-[S1]	13x13-E30-[S2]	13x13-E30-[S3]	n.p.	n.p.
	2.0	15x15-E30-[S2]	15x15-C30-[S3]	n.p.	n.p.	n.p.
	2.5	15x15-E30-[S3]	n.p.	n.p.	n.p.	n.p.
H= 3-4 m	1.0	13x13-D40-[S1]	13x13-D40-[S2]	13x13-E40-[S2]	13x13-E40-[S3]	13x13-E40-[S3]
	1.5	13x13-E40-[S1]	13x13-E40-[S2]	13x13-E40-[S3]	n.p.	n.p.
	2.0	15x15-E40-[S2]	15x15-E40-[S3]	n.p.	n.p.	n.p.
	2.5	15x15-E40-[S3]	n.p.	n.p.	n.p.	n.p.
H= 4-5 m	1.0	13x13-D50-[S1]	13x13-D50-[S2]	13x13-E50-[S2]	13x13-E50-[S3]	13x13-E50-[S3]
	1.5	13x13-E50-[S1]	13x13-E50-[S2]	13x13-E50-[S3]	n.p.	n.p.
	2.0	15x15-E50-[S2]	15x15-E50-[S3]	n.p.	n.p.	n.p.
	2.5	15x15-E50-[S3]	n.p.	n.p.	n.p.	n.p.

n.p. - not present: a specific design is needed

WARNING: fix the steel strut to the wooden beam with one nail for each hole on the end of the strut.

© CNVVF- Using allowed under CNVVF supervision

SHORES FOR BALCONIES: general recommendations

STOP-**SB**/S

Reference sketch

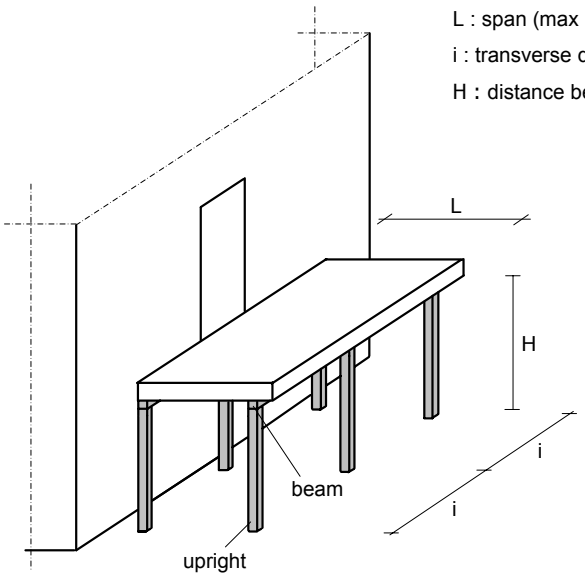

B2 DOUBLE SHORE

Geometrical parameters

L : span (max 3 m)

i : transverse distance between uprights

H : distance between two consecutive floors

Table 3 – Sizing of the wooden beams and the wooden uprights

H ≤ 4 m				
L (m) / i (m)	L ≤1.0m	1.0m<L≤1.5m	1.5m<L≤2.0m	2.0m<L≤3.0m
1.0	13x13-[B2]	13x13-[B2]	13x13-[B2]	15x15-[B2]
1.5	13x13-[B2]	13x13-[B2]	15x15-[B2]	n.p.
2.0	13x13-[B2]	15x15-[B2]	n.p.	n.p.
2.5	15x15-[B2]	n.p.	n.p.	n.p.

n.p. - not present: a specific design is needed

If 4m < H ≤ 6m, it is necessary to provide a bracing system (n. 2 planks 2.5 x 12 cm nailed on the uprights with 3 nails L = 80 mm in both directions).

Table 4 – Sizing of the wooden beams and of the steel stuts. Reference sketch [B2].
(see EN 1065 for the classification of the steel struts)

	i(m) / L(m)	L ≤1.0m	1.0m<L ≤1.5m	1.5m<L ≤2.0m	2.0m<L ≤3.0m
H< 3 m	1.0	A30	B30	C30	E30
	1.5	B30	C30	E30	n.p.
	2.0	C30	E30	n.p.	n.p.
	2.5	C30	n.p.	n.p.	n.p.
H= 3-4 m	1.0	B40	C40	D40	E40
	1.5	C40	D40	E40	n.p.
	2.0	D40	E40	n.p.	n.p.
	2.5	D40	n.p.	n.p.	n.p.
H= 4-5 m	1.0	B50	C50	D50	E50
	1.5	C50	D50	E50	n.p.
	2.0	D50	E50	n.p.	n.p.
	2.5	D50	n.p.	n.p.	n.p.
To size the wooden beams see Table 3					

n.p. - not present: a specific design is needed

© CNVVF- Using allowed under CNVVF supervision

WOODEN SHORES FOR SLABS AND BALCONIES: critical considerations

STOP-**SB**/S

Critical considerations

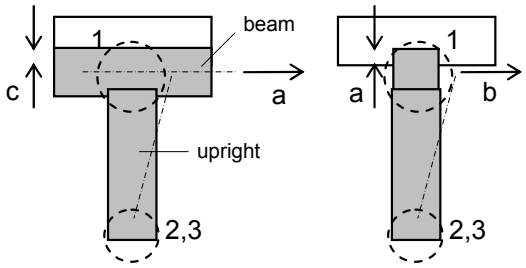

Overall critical considerations

a, b – horizontal displacement
c – separation or punching of the beam

Localised critical considerations

1 – separation of the beam/upright connection
2 – unloading of the shore
3 – collapse due to excessive load

Managing the critical areas of WOODEN SHORES

SHORES FOR SLABS

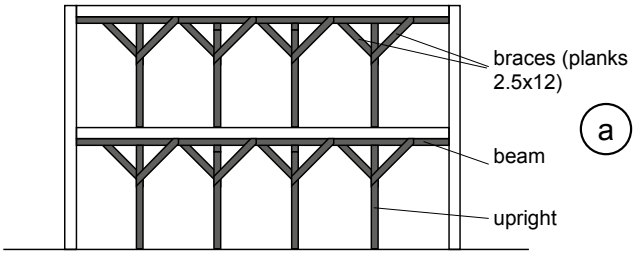

Longitudinal section

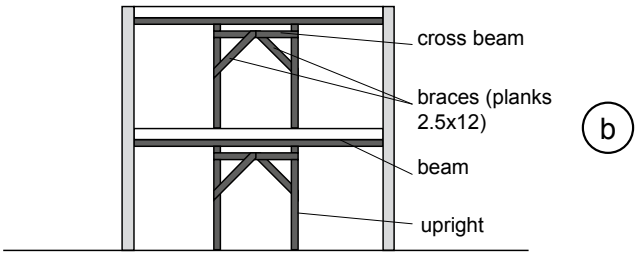

Transverse section

SHORES FOR BALCONIES

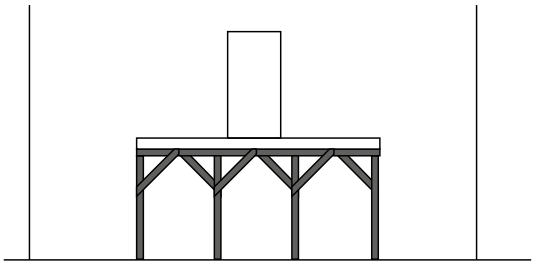

Longitudinal view

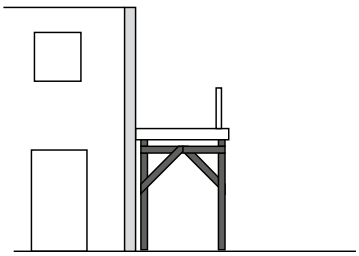

Lateral view

Provide a bracing system to stiffen the struts in transverse and longitudinal directions (n. 2 planks 2.5 x 12 cm nailed on the uprights with 3 nails L = 80 mm). The cross section of the cross beam is the same as the uprights.

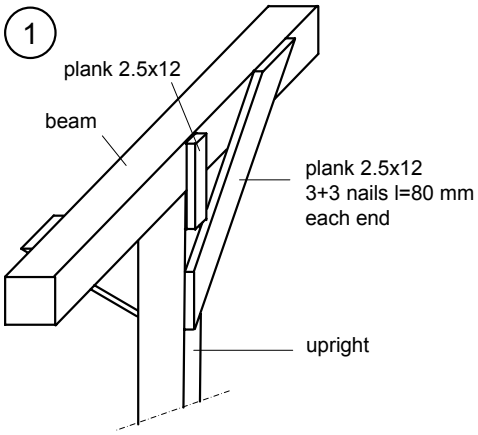

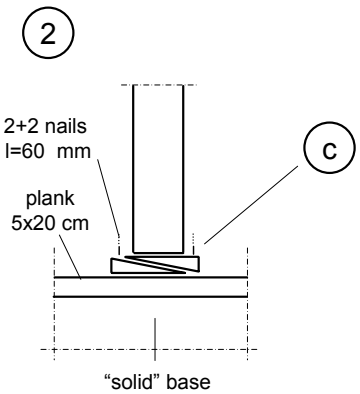

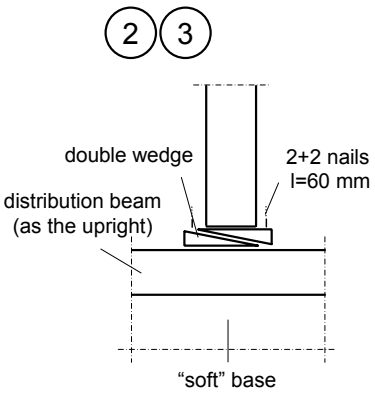

© CNVVF- Using allowed under CNVVF supervision

WOODEN/STEEL SHORES FOR SLABS AND BALCONIES: critical considerations

STOP-**SB**/S

Critical considerations

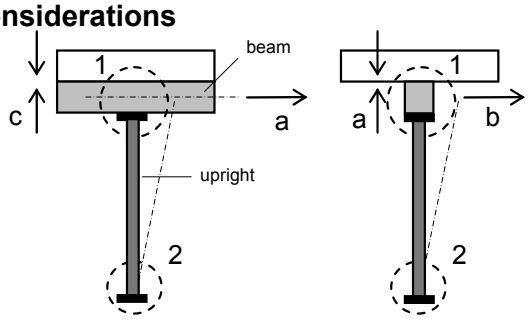

Overall critical considerations

a, b – horizontal displacement
c – separation or punching of the beam

Localised critical considerations

1 – separation of the beam/upright connection
2 – unloading of the shore
3 – collapse due to excessive load

Managing the critical areas of STEEL SHORES

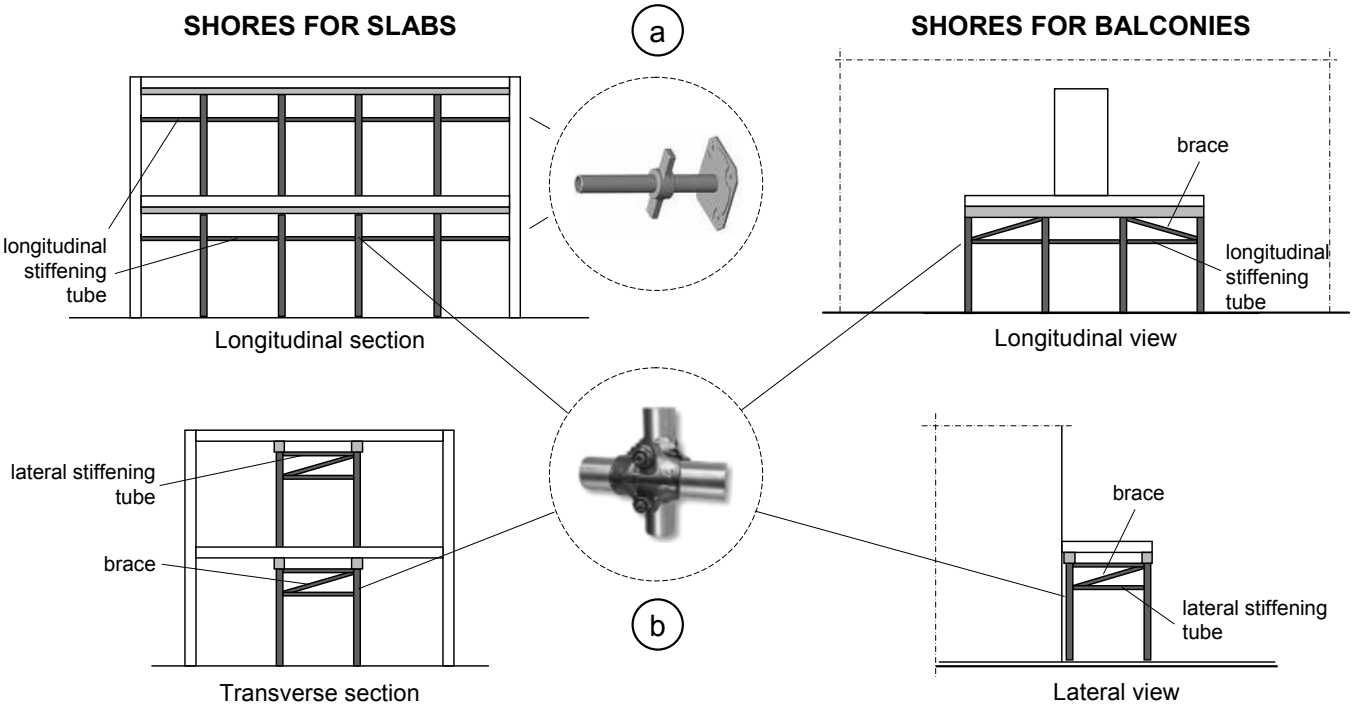

Steel tubes and special joints (b) to be linked to the extension on the telescopic strut to stiffen the structure. “Touch” the external structures with the special elements (a) to lock the system.

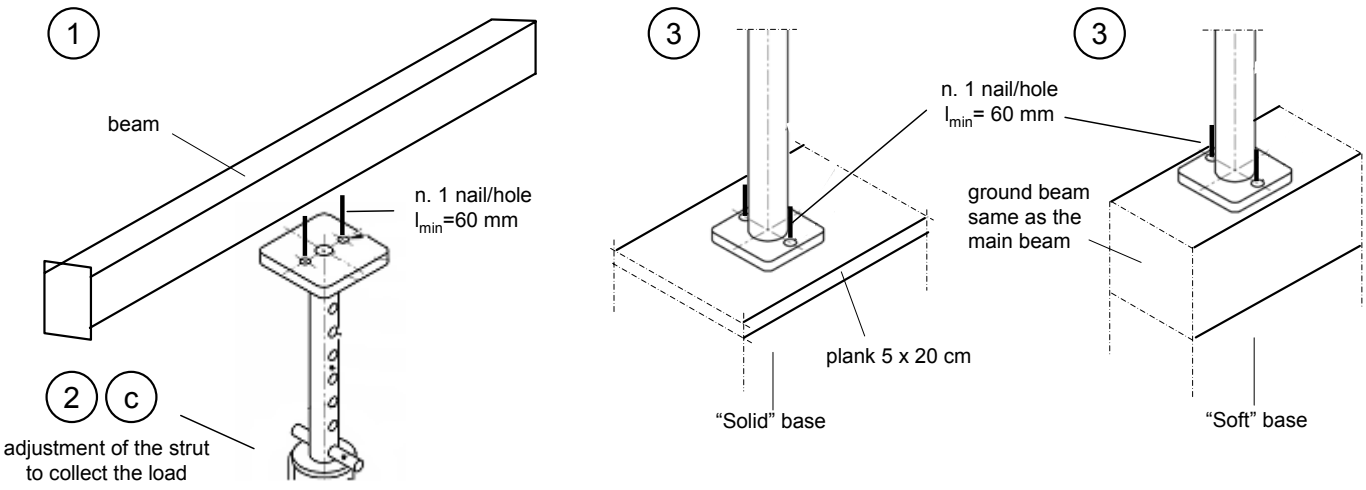

© CNVVF- Using allowed under CNVVF supervision

SHORES FOR SLABS AND BALCONIES: steel telescopic struts

STOP-**SB**/S

General assumptions

Steel struts can only be used if:

- they are compliant to the EN 1065 standard;
- the provider is in possession of the conformity certification, relating to the above-mentioned technical rule, and issued by an official laboratory;
- the telescopic struts must come with a document or a manual that includes:
  - a brief description of the struts and their components, also stating their definition in accordance with the UNI EN 1065 standard;
  - any useful direction for a proper end-use;
  - the instructions relating to maintenance and storage;
  - reference to the test certificates required by the UNI EN 1065 standard;
  - A provider's declaration of conformity to the DM 06/08/2004.

Check the class of the strut before using.
Every steel strut should be stamped as below:
- Conformity to the EN 1065 standard;
- Manufacturer
- Year of production;
- For the classification of the steel telescopic strut see EN 1065 (ex. C30, D40, E40, E50 …).

Key

1. Endplate
2. Outer tube
3. Inner tube
4. Length adjustment device
4.1 Attached pin
4.2 Outer ring
4.3 Handle
5. Central hole
6. Connection hole
7. Pin hole

Sketch
(see EN 1065)

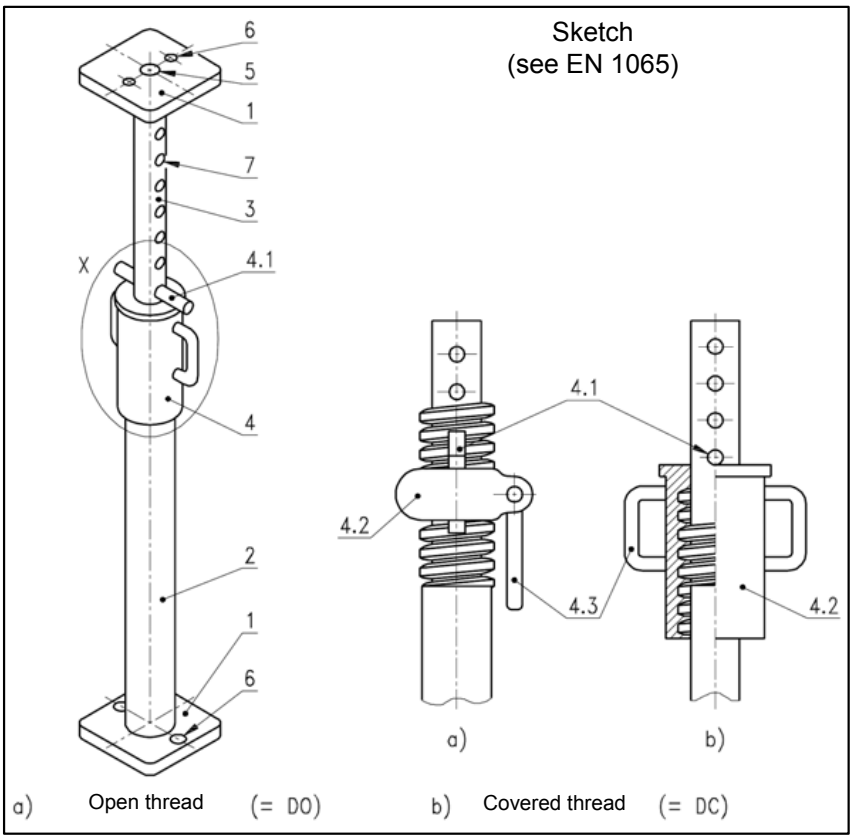

© CNVVF- Using allowed under CNVVF supervision

SHORES FOR SLABS AND BALCONIES: general recommendations

STOP-**SB**/S

SHORES FOR SLABS – SINGLE LINE "S"

Main assumptions

This shore has been designed for clay-concrete floors, having a thickness equal to 1/25 of its span, and a distribution slab 4 cm thick, loaded according to the regulation in force for civil buildings. This shore has been sized assuming that the connections at the ends of the load bearing floor's members can prevent vertical movement while allowing rotation.

General recommendations

On page 2/10 three solutions for supporting the floor are proposed (S1, S2 and S3), depending on the floor span and on the chosen spacing between shores.

It must be noted that the span "L" must be intended as the distance between supports, which should be measured once that the floor support structure direction has been identified. To this aim, the main load bearing members should be carefully and correctly identified, by removing sections of plaster, if necessary.

It must be noted that, for intermediate floors, the utilization of the "S" solution requires that all the lower floors are shored up following the sequence shown on page 1/10. In any case, the solidity of the lower structure support plane should be assessed.

Once that the material of the supporting structure has been defined (entirely in wood or wood with steel struts), the span "L" and the distance between floors "H" should be measured. For wooden structures, the design is carried out according to tab. 1 which gives the dimensions for the uprights and for the supporting beam as well as the type of shoring system depending on the selected spacing of the uprights "i". For structures with steel shores, the design is carried out according to tab. 2 which gives the dimensions of the uprights and of the supporting beams as well as the type of shoring system depending on the selected spacing of the uprights "i" and on the floor distance "H".

The wooden members have been selected as far as possible with the same cross sections, in order to make it easier to find the correct materials and to make the connections between the elements themselves more effective .

SHORES FOR BALCONIES

Main assumptions

This shore has been designed for balconies with a load bearing structure made from a solid concrete slab 15 cm thick and loaded according to the regulation in force.

This shore has been designed to support all the load.

General recommendations

On page 3/10 only one system for the balcony support has been proposed, taking into account that the scope of this shore is limited to balconies having an overhang not higher than 3 m.

The balcony shores should be designed in a similar way to that described for slab shores, according to tables 3 and 4 on page 3/10.

WARNING

All the dimensional figures must be intended as minimum design values. If a material specified in this section is not available, larger cross section for wooden elements may be used and, for steel members, the alternative materials shown in the table on the right, after consulting the following guidance, may be used. Once that the lower-right diagonal corresponding to the suggested shore is identified in the table, the cells positioned below the suggested cell and on that diagonal starting from the suggested cell should be considered. All the cells that are within the triangle described and up to the border of the table may be used.

For example, instead of B40 it is possible to use:

C40, D40, E40, C45, D45, E45, D50, E50, E55

	25	30	35	40	45	50	55
A							
B							
C							
D							
E							

© CNVVF- Using allowed under CNVVF supervision

SHORES FOR SLABS AND BALCONIES "T" SOLUTION: general recommendations

STOP-**SB**/T

Reference sketches

T

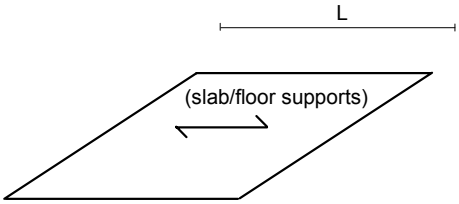

Nomenclature and reference geometrical parameters

L : span

i : distance between shores

H : distance between two consecutive floors

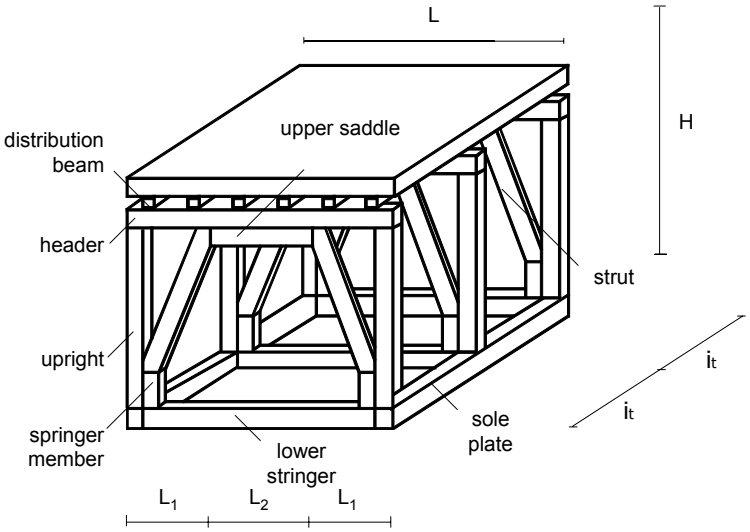

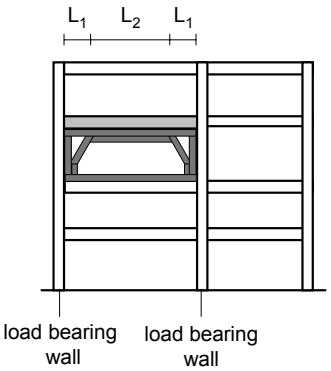

Table 5 – Sizing of the supporting system

	L (m)	L_1 (m)	L_2 (m)	i_t	header
H ≤ 4m	< 3.0	about L/3	about L/3	max 1.5 m	13x13
	3.0 - 4.0	1m < L_1 ≤ 1.25m	1m < L_2 ≤ 1.5m		15x15
	4.0 - 5.0	1.25m < L_1 ≤ 1.5m	1.5m < L_2 ≤ 2m		18x18
	5.0 - 6.0	1.5m < L_1 ≤ 1.75m	2m < L_2 ≤ 2.5m		20x20
4 < H ≤ 6m	Stiffening beams should be placed close to about half length of struts and uprights (n.2 planks 2.5x12 fixed by n.3 nails l=80 mm) in order to reduce their free flexural length.				

Other members	
upright	same as the header
strut	same as the header
sole plate	same as the header
upper saddle	same as the header
springer member	same as the header
distribution beam	beams 10x10 cm with transverse spacing equal to 50 cm

© CNVVF- Using allowed under CNVVF supervision

WOODEN SHORE "T" SOLUTION: critical considerations

STOP-**SB**/T

Critical considerations

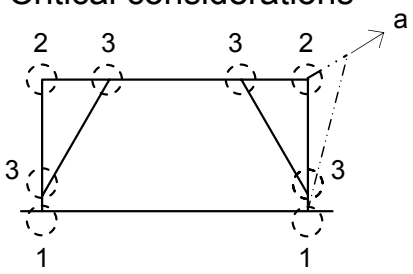

Overall critical considerations
a - possible side ways overturning/instability

Localised critical considerations
1 - possible unloading of the shore
2,3 - possible separation of the connections

Managing overall and localised critical considerations

a

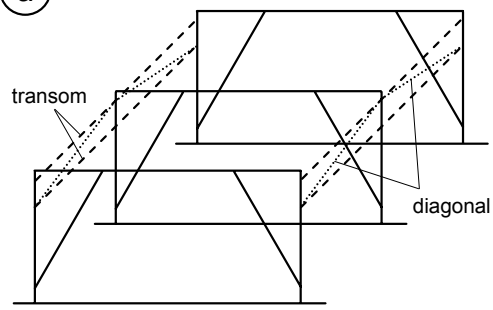

Table 6 – Placement of stiffening members

L (m)	Cross bracing and diagonals
L ≤ 3.0m	Planks 2.5x12 cm fixed on the side by 2 x 80 nails or 2 screws ϕ5x100 at each end
3.0m < L ≤ 4.0m	
4.0m < L ≤ 5.0m	beams 8x8 cm by 2 screws ϕ6x160 or 2 x 150 nails at each end *or* planks 5x20 cm by 2 screws ϕ5x100 or 2 x 100 nails for each end
5.0m < L ≤ 6.0m	

1

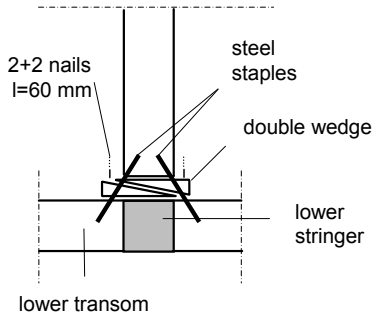

2

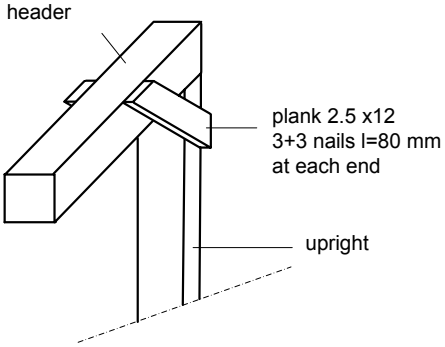

3

Strut – upper saddle connection

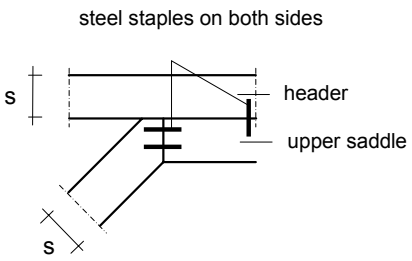

Strut – spinger connection

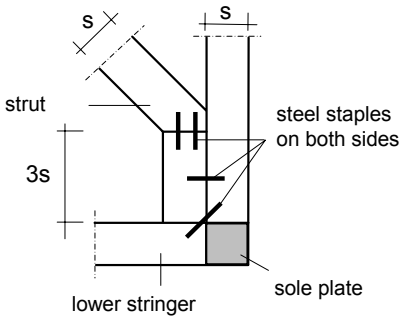

Distribution beam– header support

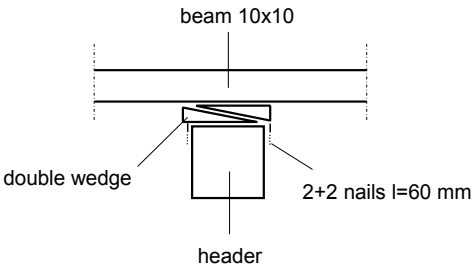

WARNING: the steel staples (minimum ϕ8) can be replaced by connecting gussets on both sides (boards 2.5 cm thick nailed or screwed)

© CNVVF- Using allowed under CNVVF supervision

SHORES FOR BALCONIES – "T" SOLUTION

Main assumptions

This shore has been designed for clay-concrete floors, having a thickness equal to 1/25 of the span, and a distribution slab 4 cm thick, loaded according to the regulation in force for civil buildings. This shore is sized to support the whole floor, irrespective of any supports at the extremities.

General directions

On page 8/10 a solution with minimum spacing of 1.5 m between each frame is proposed.
It must be noted that the proposed solution is aimed at transferring loads onto already existing load bearing members, which are assumed to be in good conditions.
Therefore, the position of load bearing elements should be carefully detected, in order to place the shore's supports close to them.
Once that the building type and the position of load bearing members has been defined, the span "L" and the distance between two consecutive floors should be measured. The design should be carried out according to table 5, which reports the relevant dimensions of the frame members and further reference for the geometrical definition of the structure.
The wooden members have been selected as far as possible with the same cross sections, in order to make it easier to find the correct materials and to make the connections between the elements themselves more effective.

WARNINGS

All the dimensional figures should be intended as minimum design values. If the specified materials are not available, timbers with larger cross sections may be used.
The static conditions of load bearing walls should be preliminarily assessed in order to verify that their damage is light or that the load bearing capacity of the structure has not been significantly modified by the earthquake.
For this purpose, the following situations are assumed as acceptable:
• cracks less than 1 mm wide, no matter how distributed on the masonry, with no material ejection
• limited detachments or light displacements (< 1 mm) between portions of structures, for example between walls and floors or between walls and stairs or between perpendicular walls.
• out-of-plumb having limited extension and not related to in-elevation detachments phenomena or to foundations settlings due to the earthquake, which can be considered pre-existing and not affecting the load bearing capacity of structures.

© CNVVF- Using allowed under CNVVF supervision

VADEMECUM STOP

SUPPORT OF VAULTS AND ARCHES

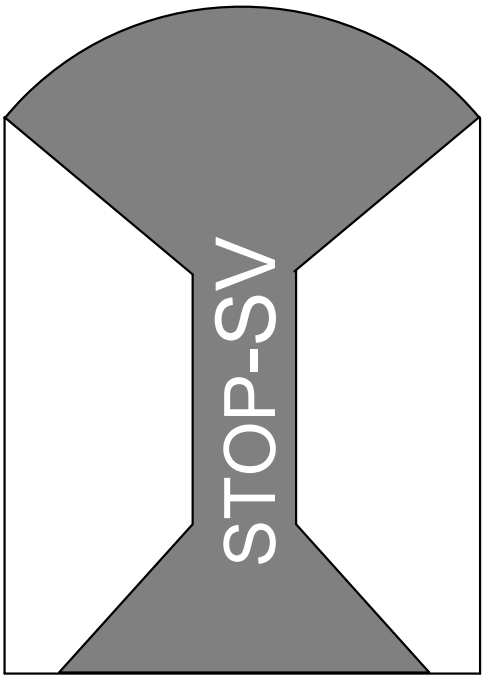

© CNVVF- Using allowed under CNVVF supervision

ABRUZZO EARTHQUAKE 2009
COORDINATION TEAM FOR TEMPORARY WORKS

WORKING GROUP FOR THE VADEMECUM STOP
under the supervision of Sergio Basti - Central director for emergency and urgent technical rescue
manual licensed by note no. EM3064/5001-11 dated 2009-06-15

S.Grimaz (coordinator)
L.Munaro, M.Cavriani, E.Mannino, C.Bolognese, M.Caciolai, L.Ponticelli,
M.Bellizzi, A. D'Odorico, A.Maiolo

With the contribute of:
F.Barazza, P.Malisan, A.Moretti

Translated by:
L. Ponticelli, S. La Mendola, E. Gissi
and
Keith Bellamy
Section Leader, Urban Search & Rescue
Hampshire Fire and Rescue Service, UK

© CNVVF- Using allowed under CNVVF supervision

SUPPORT OF VAULTS AND ARCHES: general recommendations

STOP-**SV**

Typical damage:
cracks appear at the crown and at the reins of the vault/arch

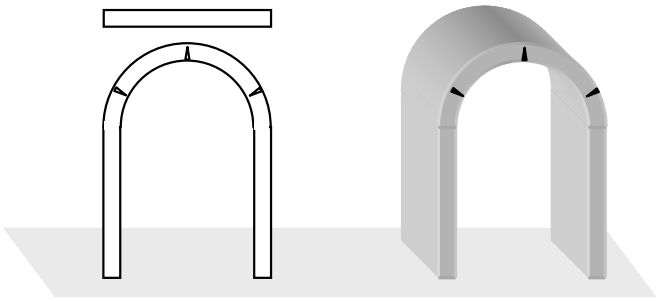

Description

In general vaults and arches with excessive loads show cracks at the crown and at the reins. In this case the shore is needed to discharge the structure.

Warning

The use of the present procedure is not allowed for reinforced concrete vaults or arches and it can only be used for rounded or reduced wall arches. For the carpentry of reduced wall arches it is possible to refer to rounded arches.

Function of the support: to direct the loads to the ground discharging the lateral masonry structure.

TYPES AND SELECTION CRITERIA

DIMENSIONAL PARAMETERS	FUNCTIONAL PARAMETERS: There's no need to pass through (Closed passage)	FUNCTIONAL PARAMETERS: There's need to pass through (Allowed passage)
0m<L≤3m	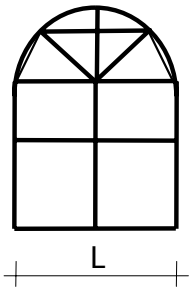 C1	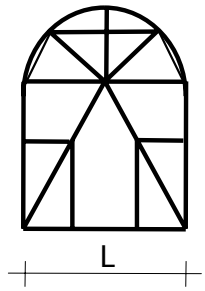 A1
3m<L≤6m	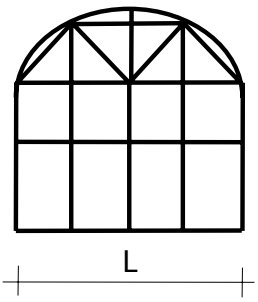 C2	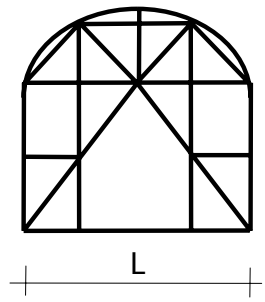 A2
6m<L≤8m	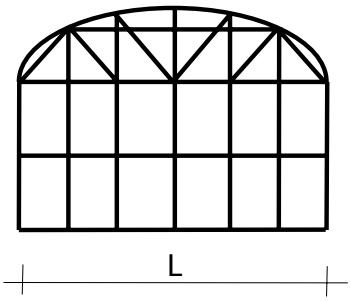 C3	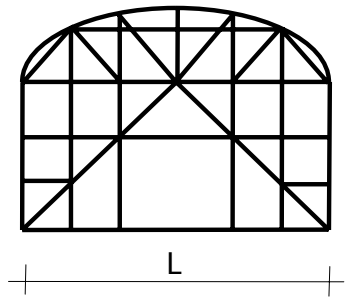 A3

© CNVVF- Using allowed under CNVVF supervision

SUPPORT OF VAULTS AND ARCHES: parts list

STOP-**SV**

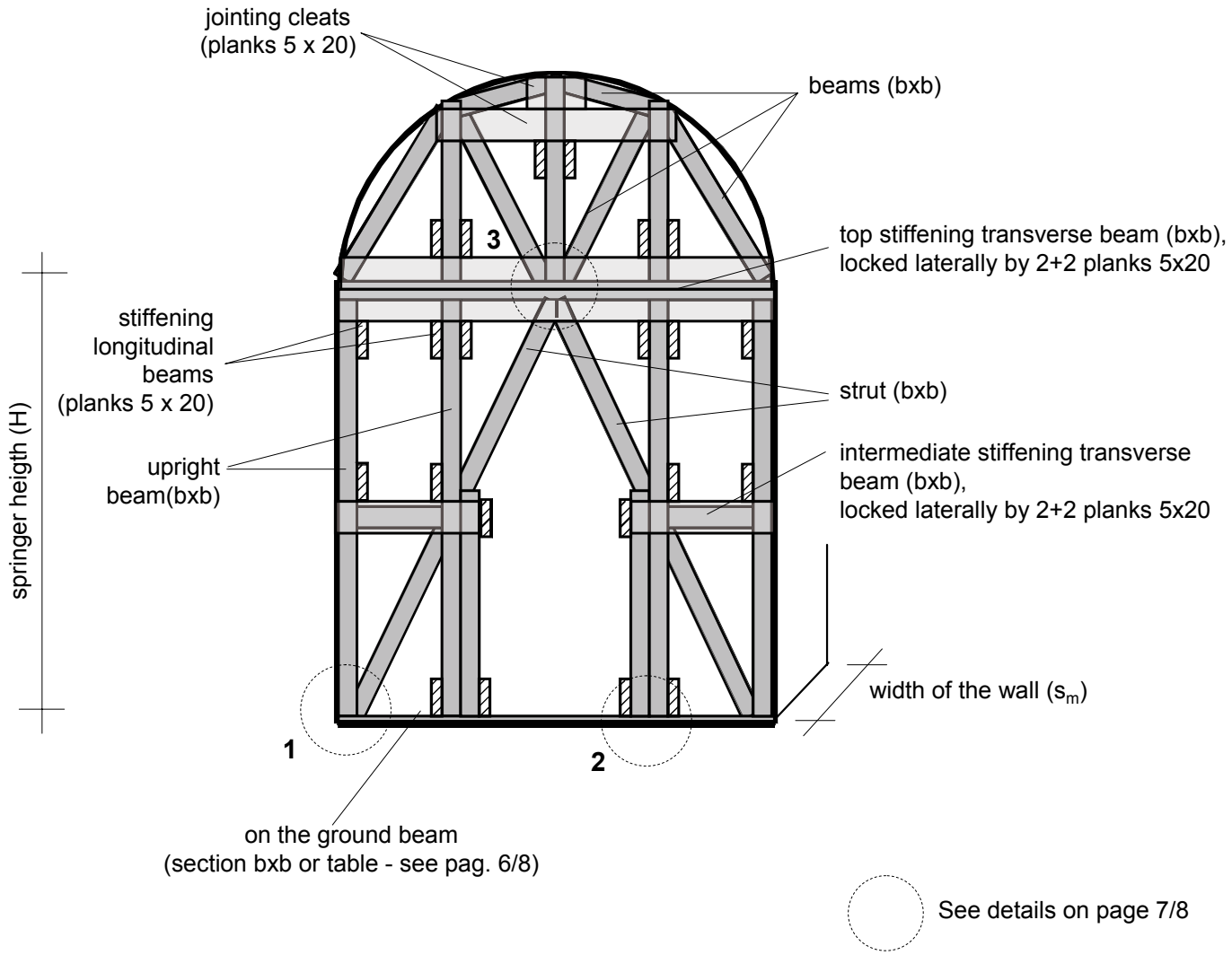

WARNING:

! This symbol indicates the range of inclination allowed for the struts.

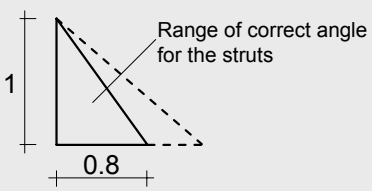

© CNVVF- Using allowed under CNVVF supervision

SUPPORT OF VAULTS AND ARCHES: Shores with span between 1.5 and 3 m | STOP-**SV**

SHORING WITH 3 OR 4 UPRIGHT BEAMS: SIZING CRITERIA

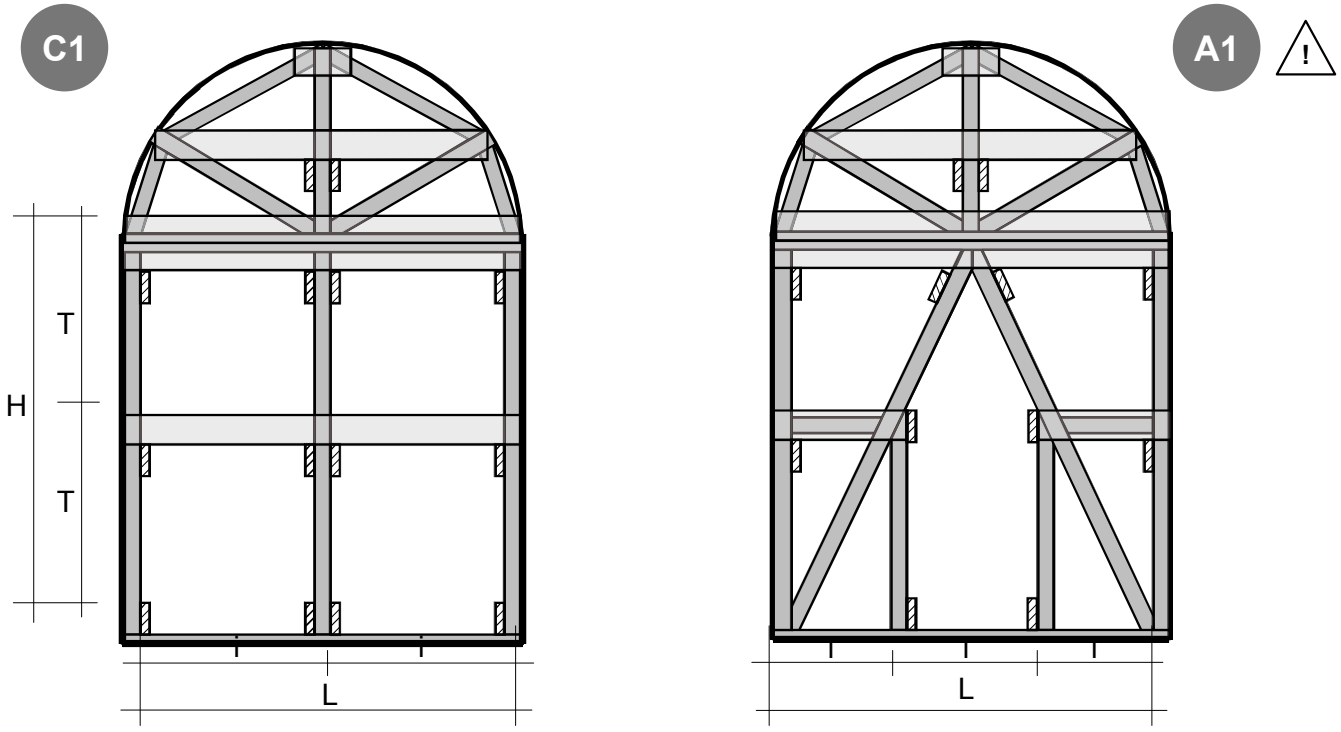

Closed passage | Allowed passage

Table 1 – Arches: maximum distance between transverse beams for braced multiple shores (T) and maximum springer heigth (H) for single shores

Span (L)	**Shores for wall width 0.5m ≤ s_m ≤ 1.0 m** Braced multiple shores				**Shores for wall width s_m ≤ 0.5 m** Single shore	
	Cross sections of beams and struts (bxb)				Cross sections of beams and struts (bxb)	
	13x13	15x15	18x18	20x20	18x18	20x20
L ≤ 1.5 m	T ≤ 2.0m	T ≤ 3.0 m	T ≤ 4.0 m	T ≤ 4.5 m	H ≤ 5.0 m	H ≤ 6.0 m
1.5 m < L ≤ 2.0 m	T ≤ 1.5 m	T ≤ 2.5 m	T ≤ 3.5 m	T ≤ 4.0 m	H ≤ 4.5 m	H ≤ 5.5 m
2.0 m < L ≤ 3.0 m	-	T ≤ 1.0 m	T ≤ 2.0 m	T ≤ 2.5 m	H ≤ 3.0 m	H ≤ 4.0 m

Table 2 - Vaults: maximum distance between transverse beams (T)

Span (L)	**Shores for barrel vaults** Maximum longitudinal distance between shores: 1.0 m		
	Cross sections of beams and struts (bxb)		
	15x15	18x18	20x20
L ≤ 1.5 m	T ≤ 1.5 m	T ≤ 2.5 m	T ≤ 3.0 m
1.5 m < L ≤ 2.0 m	-	T ≤ 1.5 m	T ≤ 2.0 m
2.0 m < L ≤ 3.0 m	-	-	T ≤ 1.0 m

N.B. remember to provide a continuous layer of planks under the wall structure to transfer the load from the masonry to the shore

© CNVVF- Using allowed under CNVVF supervision

SUPPORT OF VAULTS AND ARCHES: shores with spans between 3 and 6 m | STOP-**SV**

SHORES WITH 5 OR 6 UPRIGHT BEAMS: SIZING CRITERIA

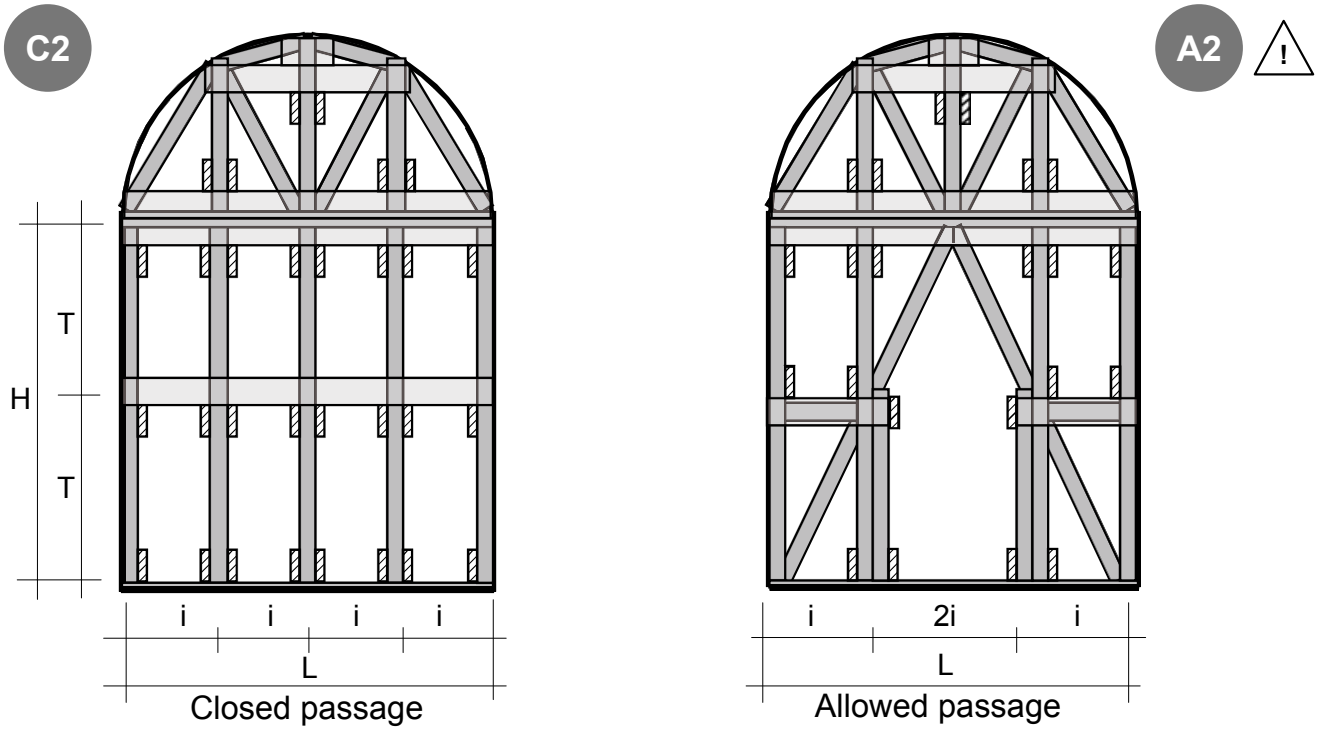

Table 3 – Arches: maximum distance between transverse beams for braced multiple shores (T) and maximum springer heigth (H) for single shores

Span (L)	**Shores for wall width 0.5m ≤ s_m ≤ 1.0 m** Braced multiple shores				**Shores for wall width s_m ≤ 0.5 m** Single shore	
	Cross sections of beams and struts (bxb)				Cross sections of beams and struts (bxb)	
	13x13	15x15	18x18	20x20	18x18	20x20
3.0 m < L ≤ 4.5 m	T ≤ 1.0 m	T ≤ 2.0 m	T ≤ 3.5 m	T ≤ 3.5 m	H ≤ 4.5 m	H ≤ 5.0 m
4.5 m < L ≤ 6.0 m	T ≤ 1.0 m	T ≤ 2.0 m	T ≤ 3.0 m	T ≤ 3.5 m	H ≤ 4.0 m	H ≤ 5.0 m

Table 4 - Vaults: maximum distance between transverse beams (T)

Span (L)	**Shores for barrel vaults** Maximum longitudinal distance between shores: 1.0 m	
	Cross sections of beams and struts (bxb)	
	18x18	20x20
3.0 m < L ≤ 4.5 m	T ≤ 1.5 m	T ≤ 2.0 m
4.5 m < L ≤ 6.0 m	T ≤ 1.0 m	T ≤ 2.0 m

N.B. remember to provide a continuous layer of planks under the wall structure to transfer the load from the masonry to the shore

© CNVVF- Using allowed under CNVVF supervision

SUPPORT OF VAULTS AND ARCHES: shores with spans between 6 and 8 m | STOP-**SV**

SHORES WITH 7 OR 8 UPRIGHT BEAMS: SIZING CRITERIA

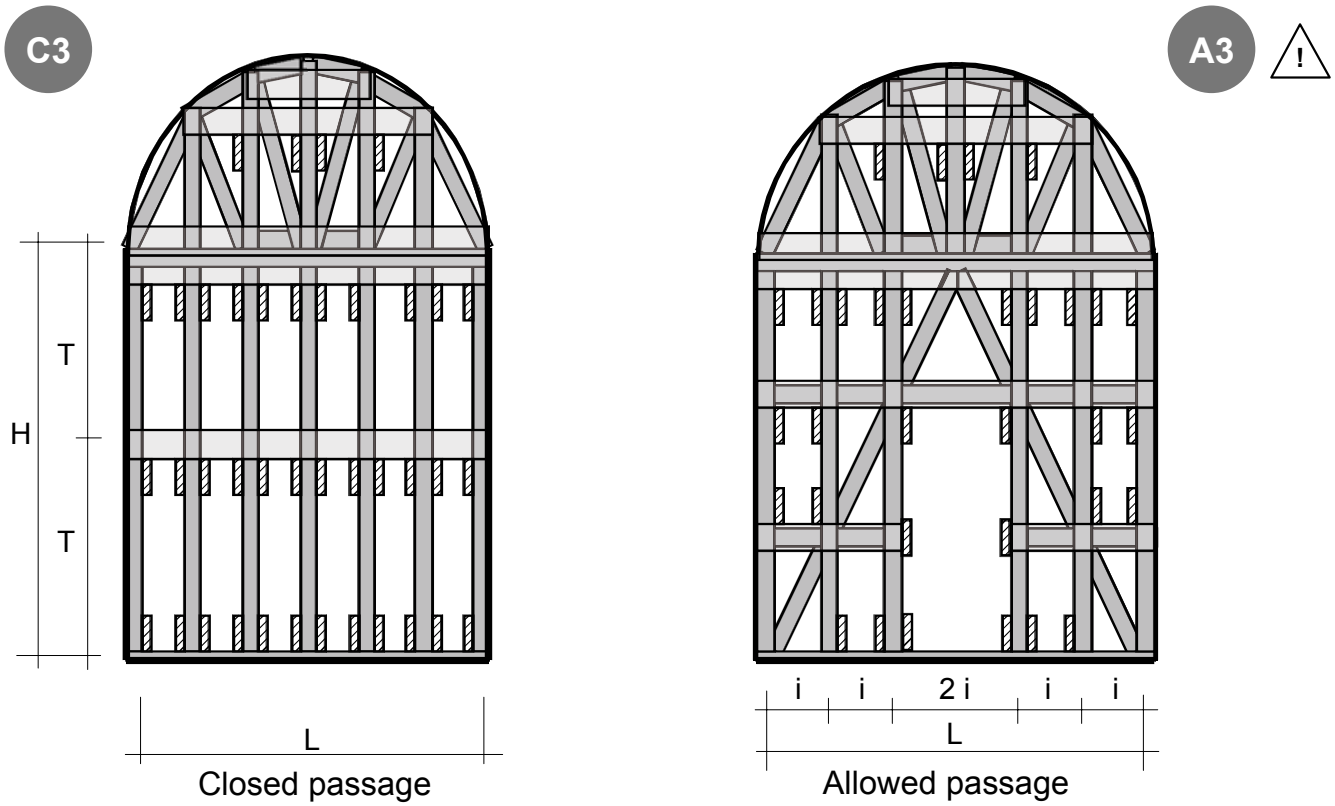

Table 5 – Arches: maximum distance between transverse beams for braced multiple shores (T) and maximum springer heigth (H) for single shores

Span (L)	**Shores for wall width 0.5m ≤ s_m ≤ 1.0 m** Braced multiple shores				**Shores for wall width s_m ≤ 0.5 m** Single shore	
	Cross sections of beams and struts (bxb)				Cross sections of beams and struts (bxb)	
	13x13	15x15	18x18	20x20	18x18	20x20
6.0 m < L ≤ 8.0 m	T ≤ 1.5 m	T ≤ 2.0 m	T ≤ 3.0 m	T ≤ 4.0 m	H ≤ 4.0 m	H ≤ 5.5 m

Table 6 - Vaults: maximum distance between transverse beams (T)

Span (L)	**Shores for barrel vaults** Maximum longitudinal distance between shores: 1.0 m	
	Cross sections of beams and struts (bxb)	
	18x18	20x20
6.0 m < L ≤ 8.0 m	T ≤ 1.5 m	T ≤ 2.0 m

N.B. remember to provide a continuous layer of planks under the wall structure to transfer the load from the masonry to the shore

© CNVVF- Using allowed under CNVVF supervision

SUPPORT OF VAULTS AND ARCHES: critical considerations

STOP-**SV**

CRITICAL CONSIDERATIONS

One of the most significant critical considerations is the transferring of the loads from the shore to the ground. If the ground is too soft, it is important to provide a distribution element (R) under the structure or a lateral discharge pattern for the loads (A) or a horizontal beam (T) or an alternative path for the loads (S).

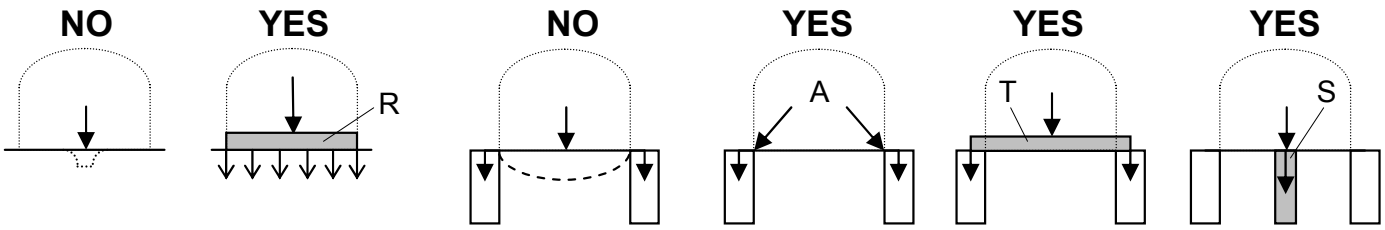

The following two examples are significant:

PRESENCE OF VOIDS UNDER THE FLOOR

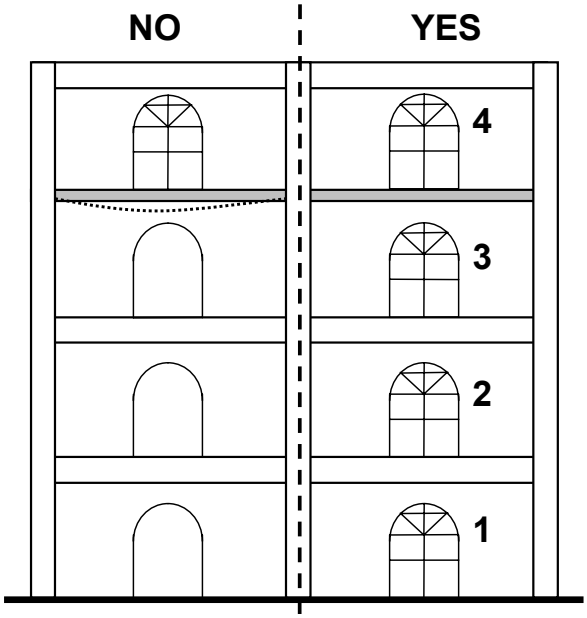

In this case see the correct sequence for the implementation of the shores: bottom-top approach

PRESENCE OF VOIDS UNDER THE FLOOR WITH THE POSSIBILITY OF A NEW PATH TO DISCHARGE THE LOADS

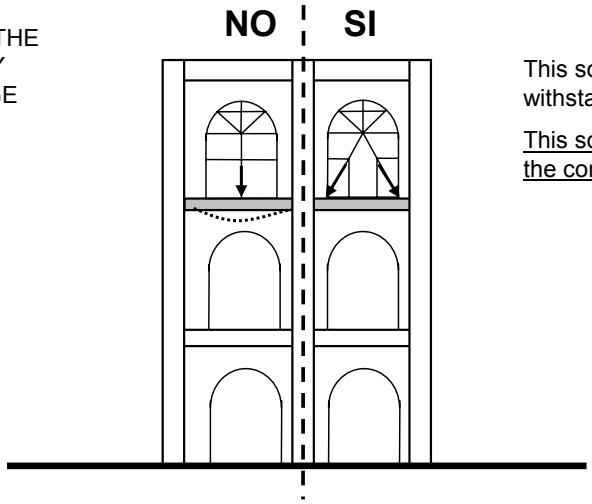

This solution can be used if the structure can withstand the new path for the load.

This solution is the best as it doesn't require the construction of shores under the floor.

© CNVVF- Using allowed under CNVVF supervision

SUPPORT OF VAULTS AND ARCHES: details

STOP-**SV**

Detail 1 — CONNECTION UPRIGHT BEAM - STRUT

DOUBLE CHAMFER IS ALWAYS REQUIRED

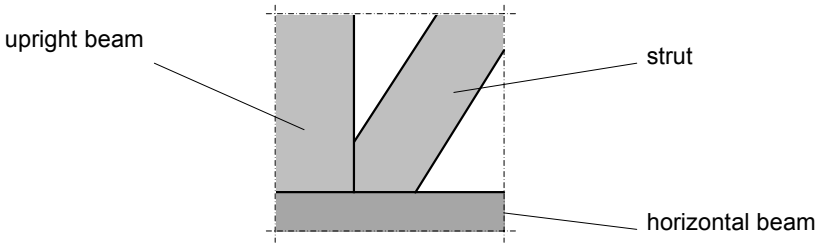

Detail 2 — GROUND CONNECTION

SYSTEM TO CONNECT THE SHORES TO THE GROUND

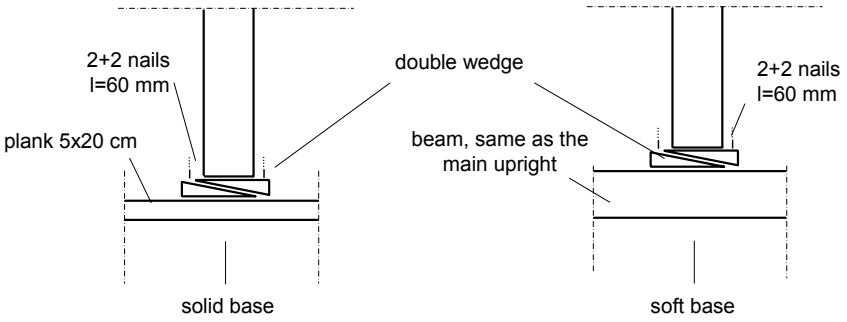

Detail 3 — TOP CONNECTION

2+2 PLANKS TO CONNECT THE HORIZONTAL BEAM

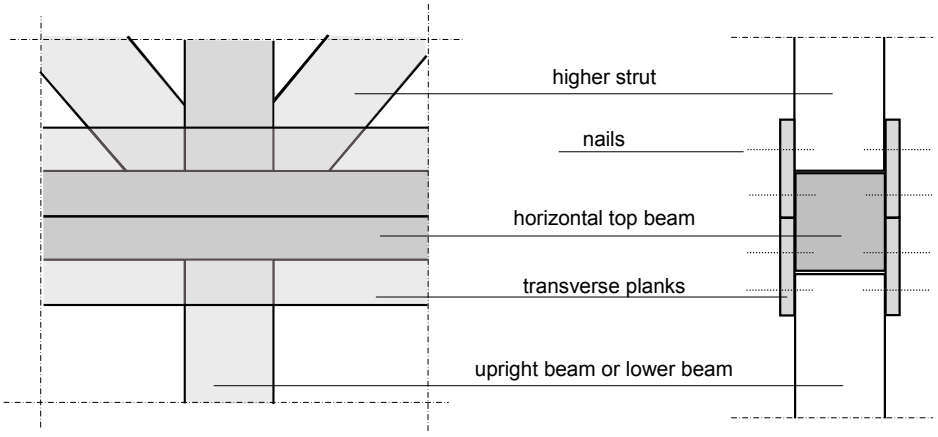

© CNVVF- Using allowed under CNVVF supervision

SUPPORT OF VAULTS AND ARCHES

Field of application

The present procedure can be used only for wall arches or wall rounded or reduced barrel vaults. It can't be used for concrete structures. If the lateral walls are in rotation other measures should be used. The maximum value of the stringer height is 8.0 m for vaults and 6 m for arches ($s_m \leq$ 1.0 m).

General assumptions

The purpose of the shore is to maintain the arch/vault and to reduce the loads on the lateral walls. **It is necessary to verify the load bearing capacity of the surface under the shore** (see page 6/8).
For vaults it is necessary to provide a continuous set of planks between the wall and the shore.

Instructions

After measuring the span "L" it is possible to select the type of shore:
- on page 3/8 the solutions for a span of no more than 3 m are listed;
- on page 4/8 the solutions for a span of no more than 6 m are listed;
- on page 5/8 the solutions for a span of no more than 8 m are listed.

For arches, it is possible to provide a single shore if the width of the wall is less than 50 cm and two braced shores if the width of the wall is less than 100 cm.
After the selection of the type, it is possible to define the cross section of the beams and then the maximum distance between the transverse planks for multiple shores or the maximum height of the arch for single shore solutions (if $s_m \leq$ 50 cm)
All the beams have the same cross section.
The type with passage allowed is possible if the inclination of the strut is less than 1/0.8.
For example, each of the two shores to provide for an arch in a wall with s_m = 0.7 m and span of 5.5 m can be built using beams 13x13 with the distance between the transverse beams not more than 1.0 m or with beams 15x15 with the maximum distance between the transverse beams equal to 2.0 m and so on.
The maximum longitudinal distance between the shores is 1.0m. For distances less than 1.0 m it is only necessary to link the beam with screws.

© CNVVF- Using allowed under CNVVF supervision